TOYOTA

G40, G45, G50, G52, G53
G54, G55, G56, G57, G58

TRANSMISSION

REPAIR MANUAL

Aug., 1988

TL
215
.T69
1988

Pub. No. RM141E

Toyota Jid
Toyota man
A# 31267084
B# 5249373
MG

FOREWORD

A31267084B

TL
215
.T69
1988

This repair manual has been prepared to provide information covering general service repairs for the G40, G45, G50, G52, G53, G54, G55, G56, G57 and G58 Manual Transmissions.

Applicable models:

KM30, 36, 37 series
YM30, 35 series
CM 36 series
YR 21, 22, 29, 31 series
KF 40, 50 series
YN 85, 86, 87, 92, 106, 110 series
LN 80, 85, 90, 100, 106, 111 series
RN 80, 85, 90, 105, 110 series
YH 51, 53, 60, 61, 63, 73 series
LH 51, 61, 71 series
YH 81 series
LH 80 series
RJ 70 series
LJ 70 series
YN 63 LG series
YN 63 RG series
LN 61 RG series

DATE DUE
8 MAR 2007

For the other service specifications and repair procedures of the above model than those listed in this manual, refer of the chassis and body repair manual.

All information contained in this manual is the most up-to-date at the time of publication. However, specifications and procedures are subject to change without notice.

TOYOTA MOTOR CORPORATION

Mt Gravatt College of TAFE
23 NOV 1994
LIBRARY

TOYOTA MANUAL TRANSMISSION G40, G45, G50, G52, G53 G54, G55, G56, G57 AND G58 REPAIR MANUAL

INTRODUCTION IN

MANUAL TRANSMISSON MT

SERVICE SPECIFICATIONS A

STANDARD BOLT TORQUE SPECIFICATIONS B

SST AND SSM C

© 1988 TOYOTA MOTOR CORPORATION
All rights reserved. This book may not be reproduced or copied, in whole or in part, without the written permission of Toyota Motor Corporation.

INTRODUCTION

	Page
HOW TO USE THIS MANUAL	IN-2
GENERAL REPAIR INSTRUCTIONS	IN-4
ABBREVIATIONS USED IN THIS MANUAL	IN-6

HOW TO USE THIS MANUAL

To assist you in finding your way through the manual, the Section Title and major heading are given at the top of every page.

An **INDEX** is provided on the 1st page of each section to guide you to the item to be repaired.

At the beginning of each section, **PRECAUTIONS** are given that pertain to *all* repair operations contained in that section. *Read these precautions before starting any repair task.*

REPAIR PROCEDURES

Most repair operations begin with an overview illustration. It identifies the components and shows how the parts fit together.

Example:

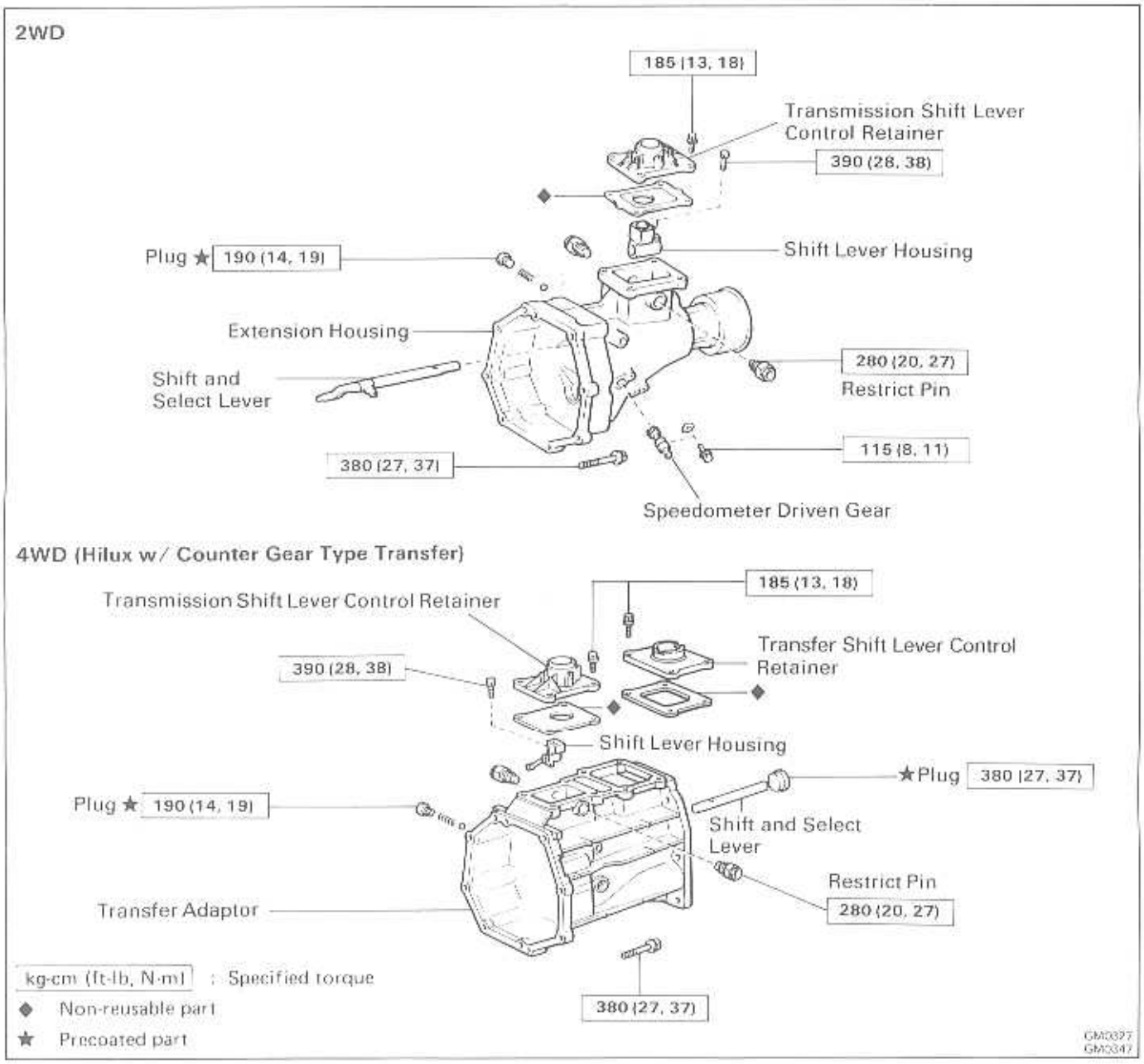

The procedures are presented in a step-by-step format:

- Illustration shows *what* to do and *where* to do it.
- The task heading tells *what* to do.
- The detailed text tells *how* to perform the task and gives other information such as specifications and warnings.

Example:

Task heading: what to do

Illustration: what to do and where

IF NECESSARY, REPLACE FRONT BEARING RETAINER OIL SEAL

(a) Using a screwdriver, pry out the oi seal.

Detailed text: how to do task

Set part No. *Component part No.*

(b) Using SST, drive in a new oil seal.

SST 09608-35014 (09608-06020, 09608-06090)

Drive in depth: 10.5 — 11.5 mm (0.413 — 0.453 in.)
Transmission case installation surface

Specification

This format provides the experienced technician with a FAST TRACK to the information needed. The upper case task heading can be read at a glance when necessary, and the text below it provides detailed information. Important specifications and warnings always stand out in bold type.

REFERENCES

References have been kept to a minimum. However, when they are required, you are given the page to refer to.

SPECIFICATIONS

Specifications are presented in bold type throughout the text where needed. You never have to leave the procedure to look up your specs. All specifications task are also found in Appendix A, specifications, for quick reference.

CAUTION, NOTICE, HINT:

- CAUTION are presented in bold type, and indicate there is a possibility of injury to you or other people.
- NOTICE are also presented in bold type, and indicate the possibility of damage to the components being repaired.
- HINT are separated from the text but do not appear in bold. They provide additional information to help you efficiently perform the repair.

GENERAL REPAIR INSTRUCTIONS

1. Use fender, seat and floor covers to keep the vehicle clean and prevent damage.

2. During disassembly, keep parts the appropriate in order to facilitate reassembly.

3. Observe the following:
   (a) Before performing electrical work, disconnect the negative cable from the battery terminal.
   (b) If it is necessary to disconnect the battery for inspection or repair, always disconnect the cable from the negative (−) terminal which is grounded to the vehicle body.
   (c) To prevent damage to the battery terminal post, loosen the terminal nut and raise the cable straight up without twisting or prying it.
   (d) Clean the battery terminal posts and cable terminals with a shop rag. Do not scrape them with a file or other abrasive object.
   (e) Install the cable terminal to the battery post with the nut loose, and tighten the nut after installation. Do not use a hammer or such to tap the terminal onto the post.
   (f) Be sure the cover for the positive (+) terminal is properly in place.

4. Check hose and wiring connectors to make sure that they are secure and correct.

5. Non-reusable parts
   (a) Always replace cotter pins gaskets, O-rings, oil seals, etc. with new ones.
   (b) Non-reusable parts are indicated in the component illustrations by the " ◆ " symbol.

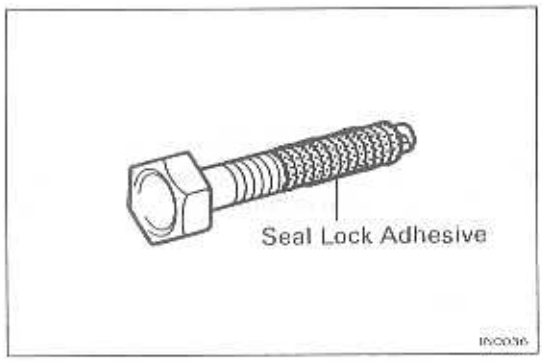

6. Precoated Parts

   Precoated parts are bolts and nuts, etc. that are coated with a seal lock adhesive at the factory.
   (a) If a precoated part is retightened, loosened or caused to move in any way, it must be recoated with the specified adhesive.
   (b) Recoating of Precoated Parts
      (1) Clean off the old adhesive from the bolt, nut or threads.
      (2) Dry with compressed air.
      (3) Apply the specified seal lock adhesive to the part's threads.
   (c) Precoated parts are indicated in the component illustrations by the "★" symbol.

7. When necessary, use a sealer on gaskets to prevent leaks.

8. Carefully observe all specifications for bolt torques. Always use a torque wrench.

9. Use of special service tools (SST) and special service materials (SSM) may be required, depending on the nature of the repair. Be sure to use SST and SSM where specified and follow the proper work procedure. A list of SST and SSM can be found at the back of this manual.

10. When replacing fuses, be sure the new fuse has the correct amperage. DO NOT exceed the fuse amp rating or use one of lower rating.

11. Care must be taken when jacking up and supporting the vehicle. Be sure to lift and support the vehicle at the proper locations.

    (a) If the vehicle is to be jacked up only at the front or rear end, be sure to block the wheels at the opposite end in order to ensure safety.

    (b) After the vehicle is jacked up, be sure to support it on stands. It is extremely dangerous to do any work on a vehicle raised on a jack alone, even for a small job that can be finished quickly.

ABBREVIATIONS USED IN THIS MANUAL

FIPG	Formed in Place Gasket
in.	Inch
MP	Multipurpose
SSM	Special Service Materials
SST	Special Service Tools
2WD	Two Wheel Drive Vehicles (4 × 2)
4WD	Four Wheel Drive Vehicles (4 × 4)
w/	With

MANUAL TRANSMISSION

	Page
PRECAUTIONS	MT-2
(G40, G45, G50, G52, G53, G54, G55, G56, G57 and G58 Transmissions) COMPONENTS	MT-3
DISASSEMBLY OF TRANSMISSION (REMOTO CONTROL SHIFT TYPE)	MT-9
DISASSEMBLY OF TRANSMISSION (DIRECT SHIFT TYPE)	MT-17
COMPONENT PARTS	MT-27
Input Shaft Assembly	MT-27
Output Shaft Assembly	MT-29
Counter Gear Assembly and Reverse Idler Gear	MT-38
Shift Lever Shaft Assembly	MT-42
Front Bearing Retainer	MT-47
Extension Housing and Transfer Adaptor	MT-48
ASSEMBLY OF TRANSMISSION (REMOTO CONTROL SHIFT TYPE)	MT-52
ASSEMBLY OF TRANSMISSION (DIRECT SHIFT TYPE)	MT-63

PRECAUTIONS

When working with FIPG material, you must be observe the following.

- Using a razor blade and gasket scraper, remove all the old packing (FIPG) material from the gasket surfaces.
- Thoroughly clean all components to remove all the loose material.
- Clen both sealing surfaces with a non-residue solvent.
- Apply the seal packing in approx. 1 mm (0.04 in.) bead along the sealing surface.
- Parts must be assemled within 10 minutes of application. Otherwise, the packing (FIPG) material must be removed and reapplied.

G40, G45, G50, G52, G53, G54, G55, G56, G57 AND G58 TRANSMISSIONS

COMPONENTS

[REMOTE CONTROL SHIFT TYPE]

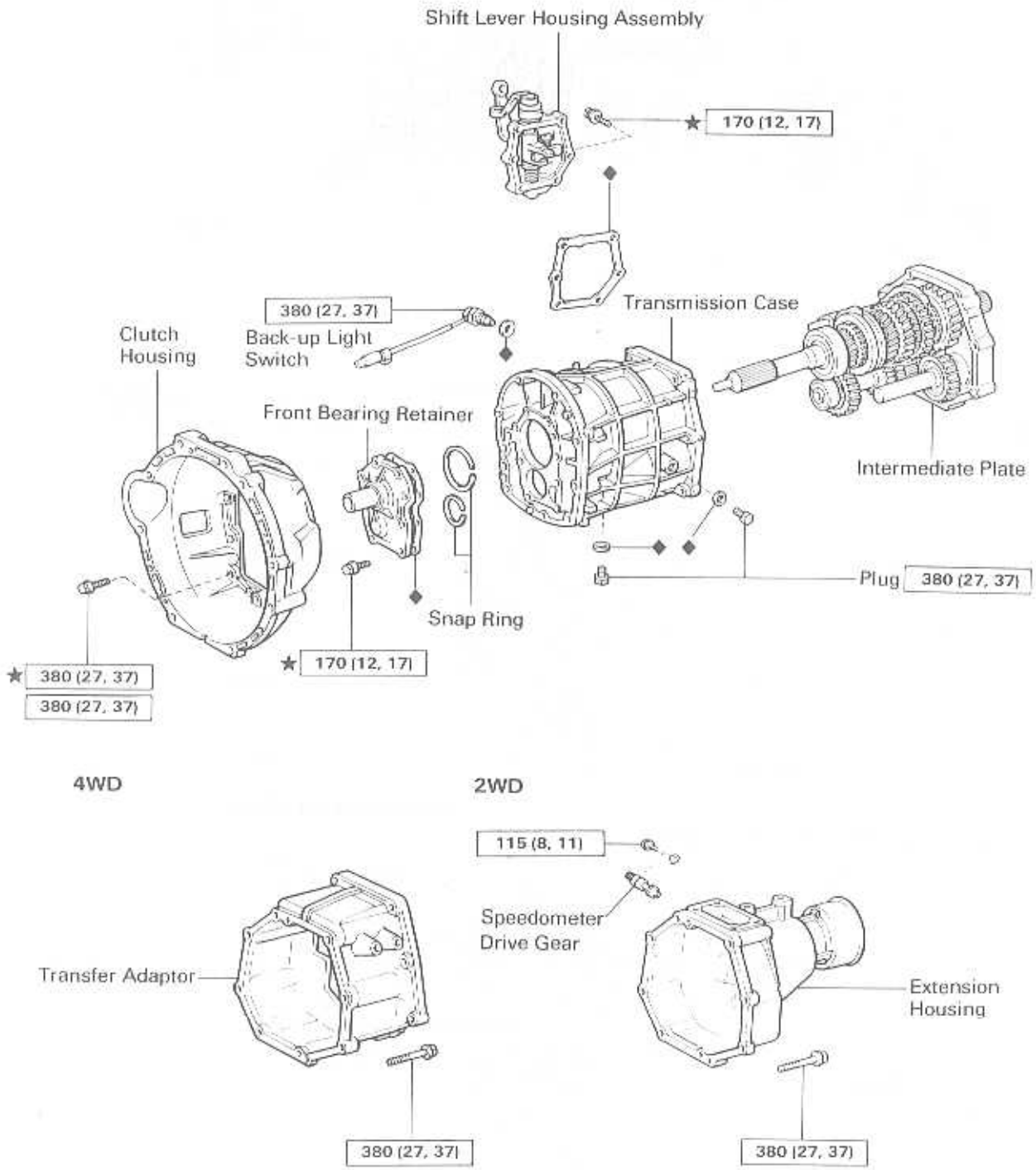

kg-cm (ft-lb, N-m)

◆ Non-reusable part

★ Precoated part

GVC376
GVC371
GVC372

COMPONENTS (Cont'd)

[DIRECT SHIFT TYPE]

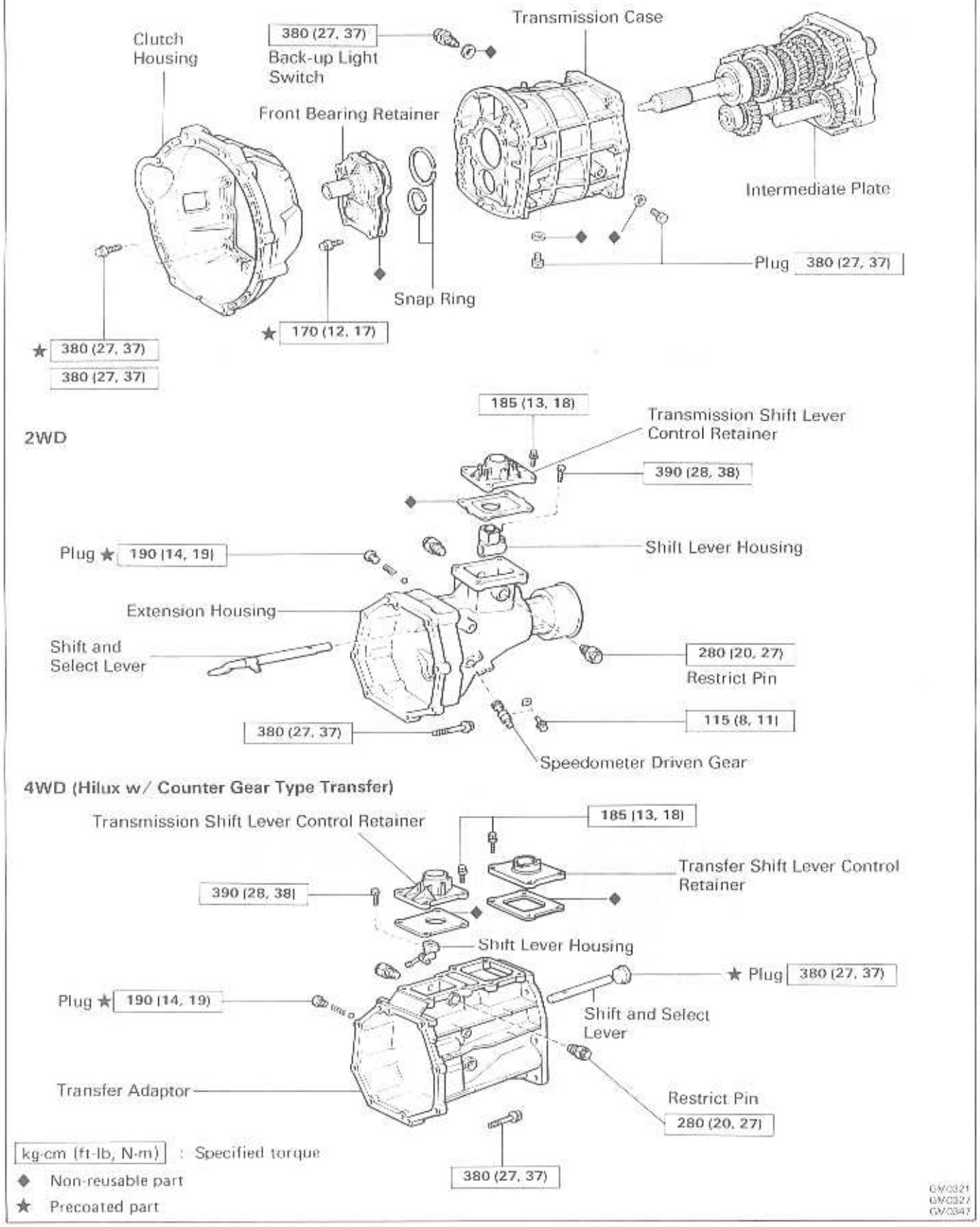

COMPONENTS (Cont'd)

4WD (Hilux w/ Planetary Gear Type Transfer)

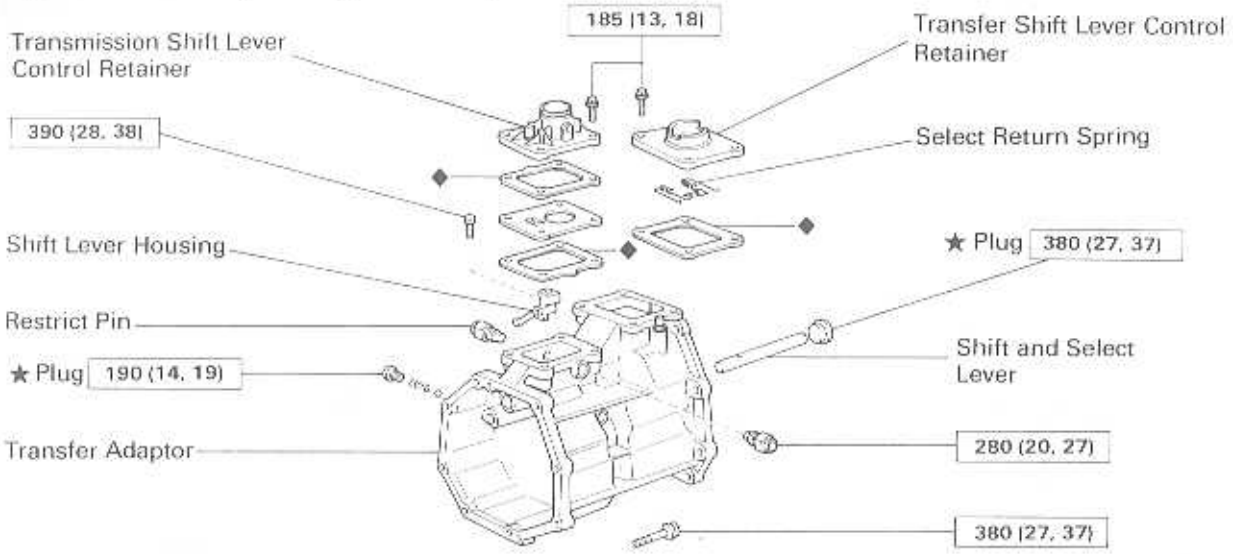

4WD (Land Cruiser)

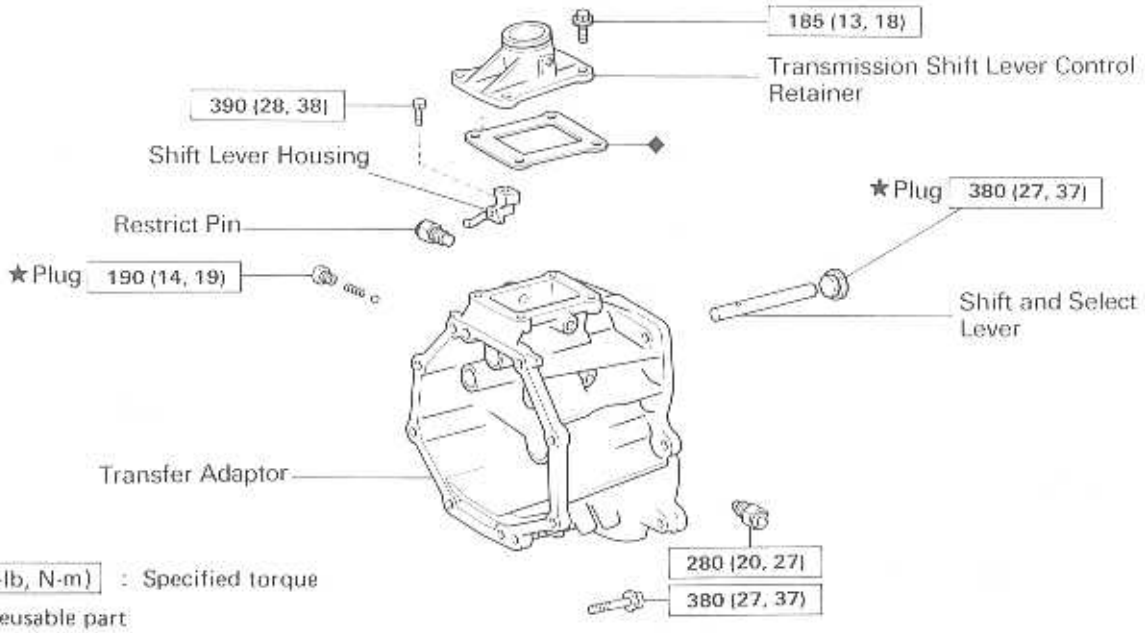

kg-cm (ft-lb, N-m) : Specified torque

◆ Non-reusable part

★ Precoated part

GM0300

COMPONENTS (Cont'd)

[REMOTE CONTROL SHIFT TYPE]

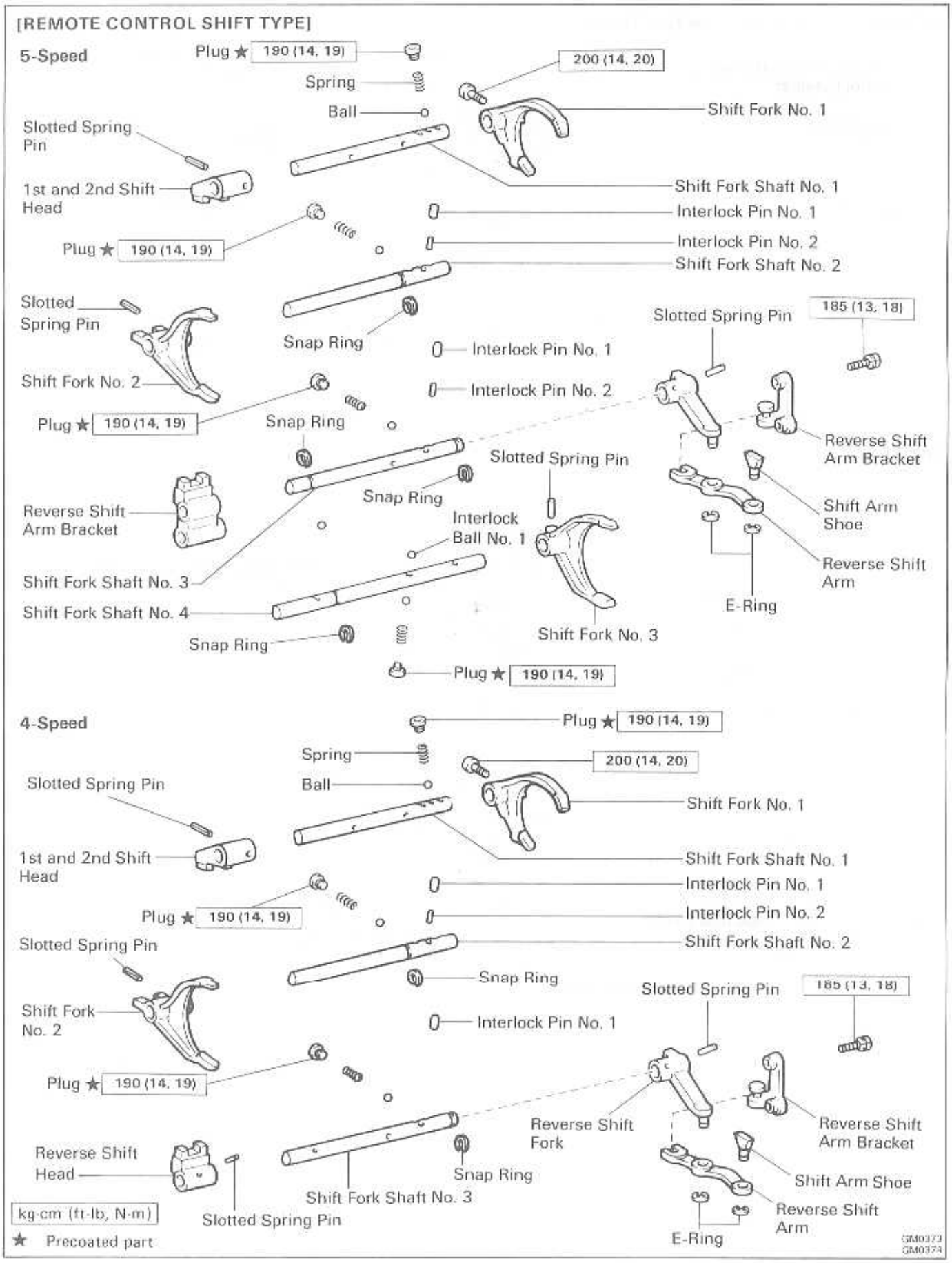

COMPONENTS (Cont'd)

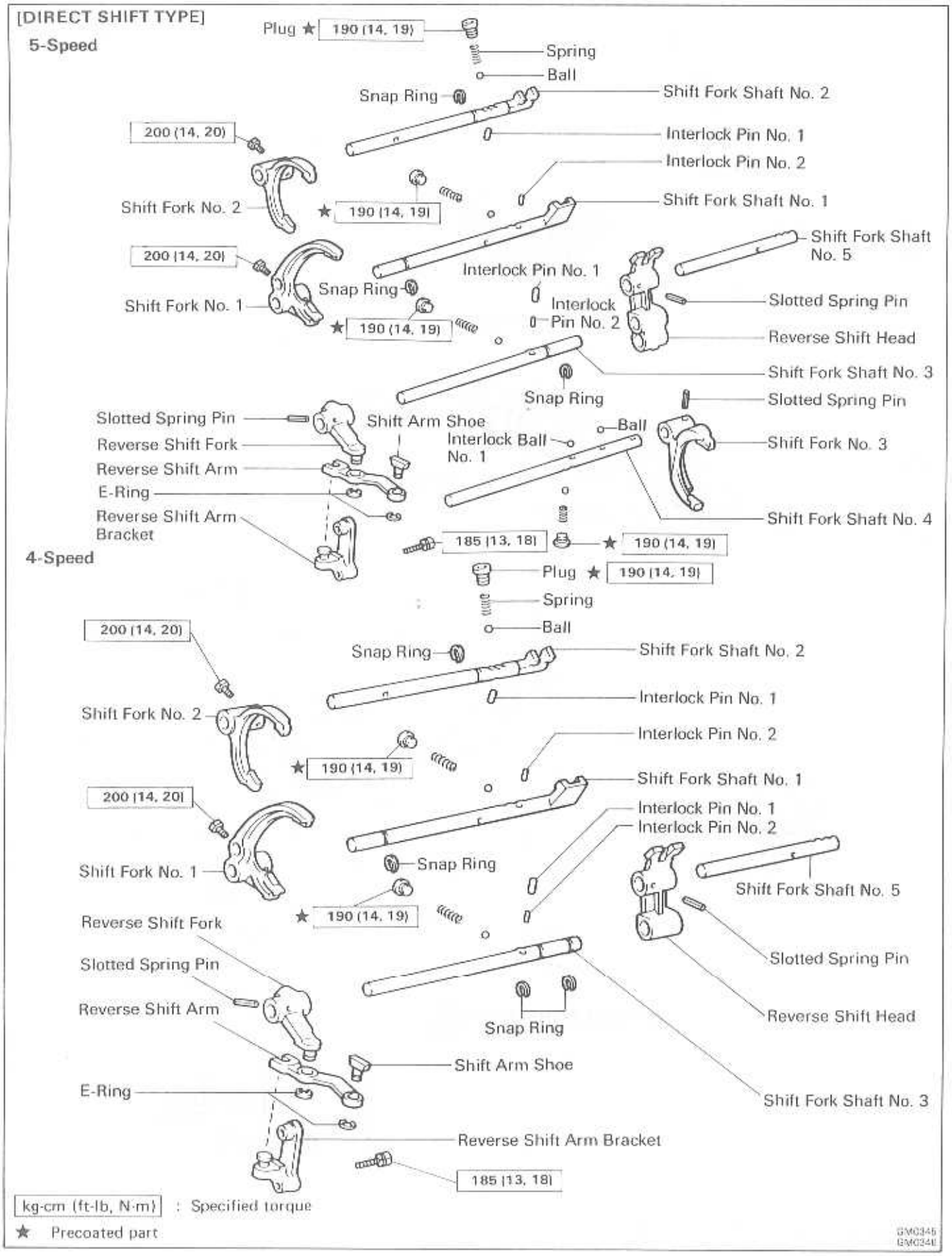

COMPONENTS (Cont'd)

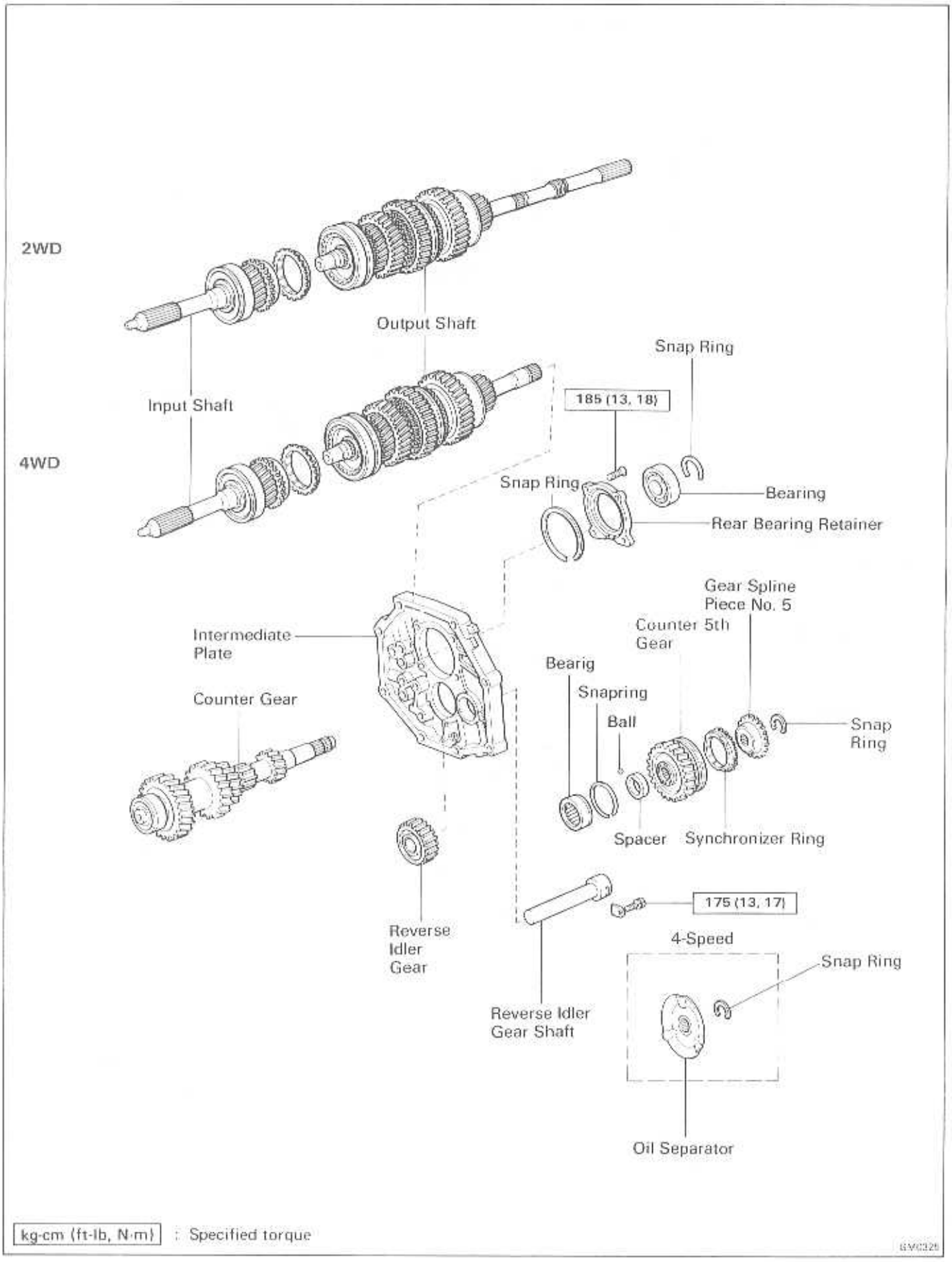

DISASSEMBLY OF TRANSMISSION (REMOVE CONTROL SHIFT TYPE)

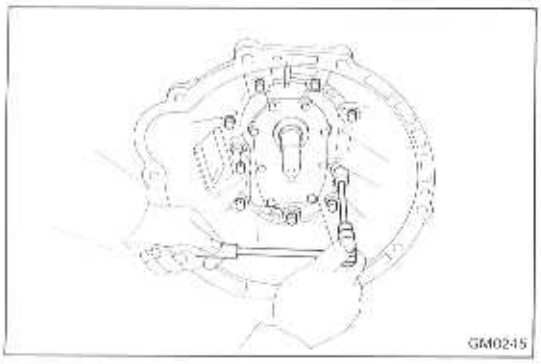

1. REMOVE RELEASE FORK AND BEARING
2. REMOVE BACK-UP LIGHT SWITCH AND SPEEDOMETER DRIVEN GEAR (2WD)
3. REMOVE CLUTCH HOUSING FROM TRANSMISSION CASE

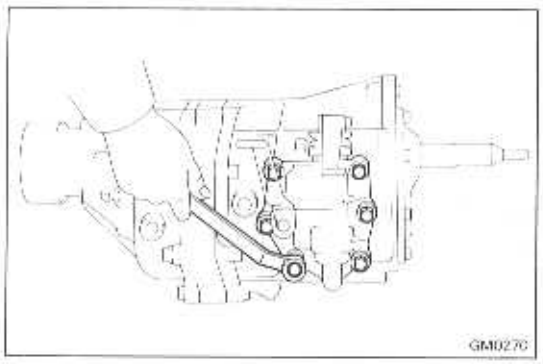

4. REMOVE SHIFT LEVER SHAFT HOUSING ASSEMBLY

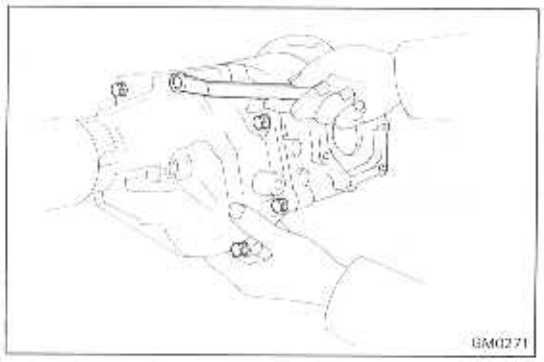

5.-1 (2WD)
REMOVE EXTENSION HOUSING

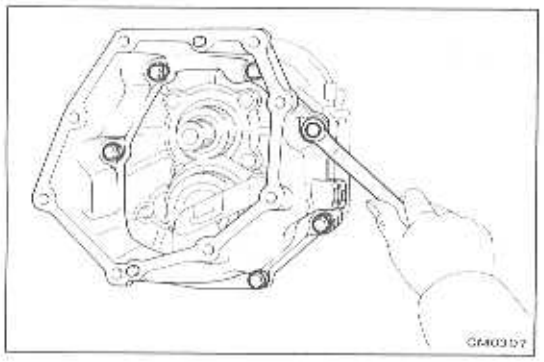

5.-2 (4WD)
REMOVE TRANSFER ADAPTOR

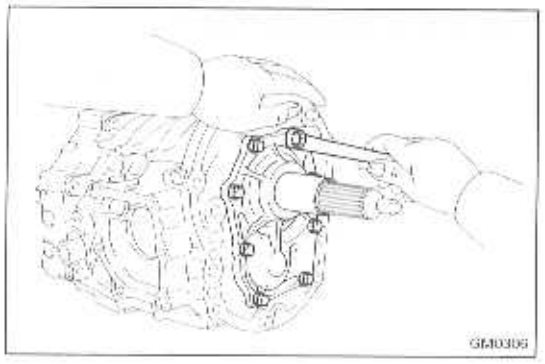

6. REMOVE FRONT BEARING RETAINER

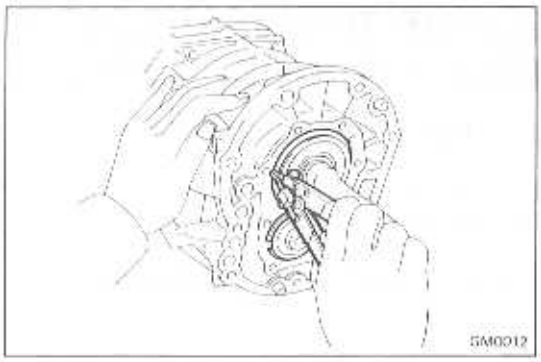

7. REMOVE BEARING SNAP RINGS

Using snap ring pliers, remove the two snap rings.

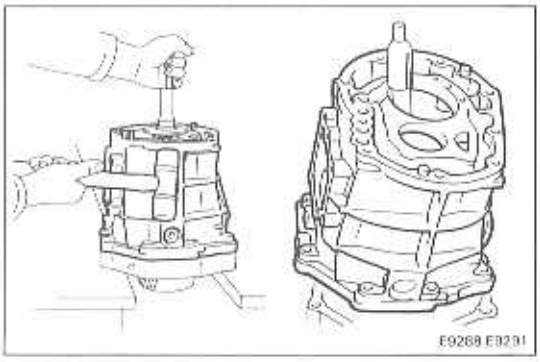

8. SEPARATE INTERMEDIATE PLATE FROM TRANSMISSION CASE

(a) Stand the transmission as shown.

(b) Using a plastic hammer, carefully tap off the transmission case.

(c) Remove the transmission case from the intermediate plate as shown.

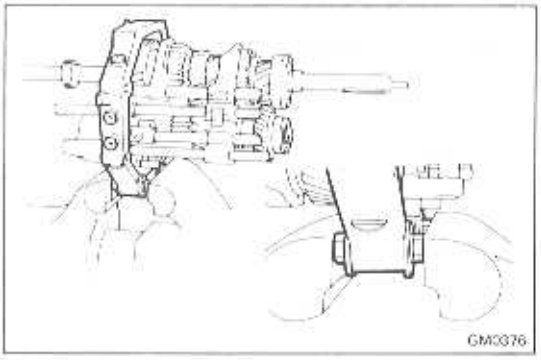

9. MOUNT INTERMEDIATE PLATE IN VISE

(a) Use the two clutch housing bolts, plate washers and suitable nuts as shown.

NOTICE: Install the plate washers in reverse of normal position. Increase or decrease plate washers so that the bolt tip and front tip surface of the nut are aligned.

(b) Mount the intermediate plate in a vise.

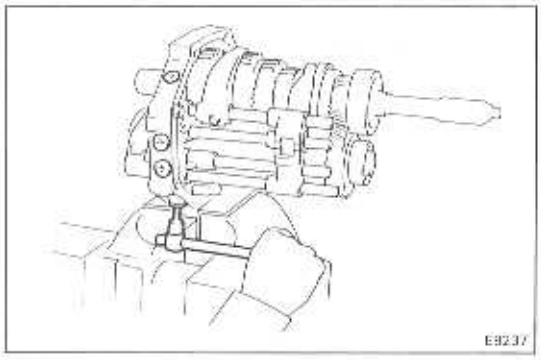

10. REMOVE STRAIGHT SCREW PLUGS, LOCKING BALLS AND SPRINGS

(a) Using torx socket wrench, remove the plugs.

(Torx socket wrench T40 09042-00020)
4-Speed Three plugs
5-Speed Four plugs

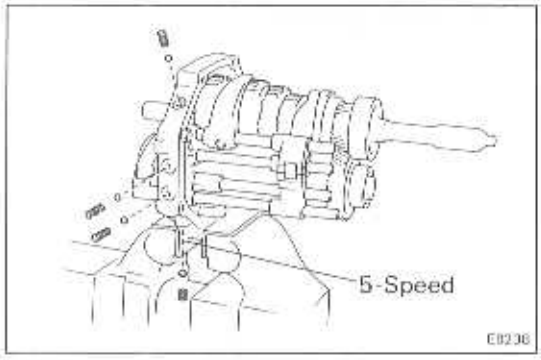

(b) Using a magnetic finger, remove the springs and balls.

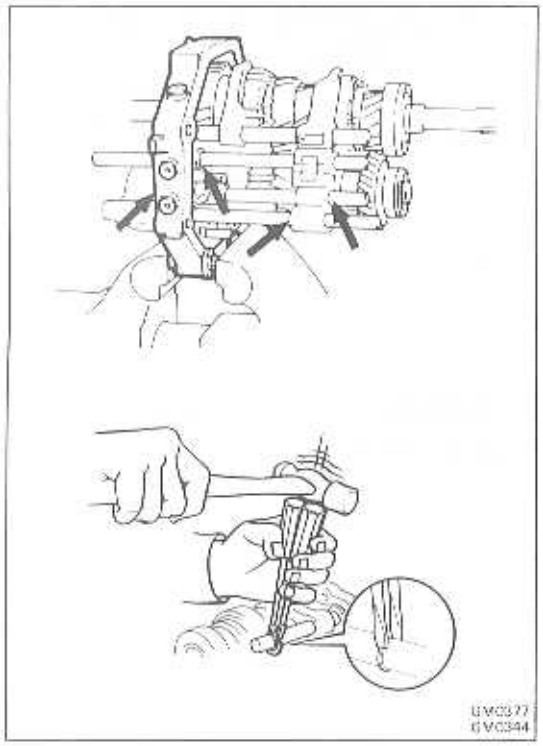

11. REMOVE SHIFTFORK SHAFT SNAP RING

Using two screw drivers and a hammer drive out snap rings.

5-Speed: Four snap rings.
4-Speed: Two snap rings.

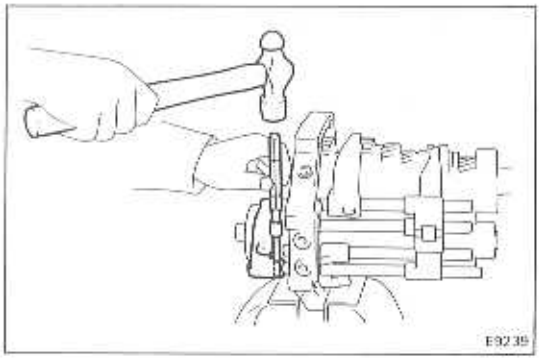

12. REMOVE SHIFTFORK NO. 3 AND SHIFT FORK SHAFT NO. 4

(a) Using a pin punch and a hammer drive out the slotted spring pin.

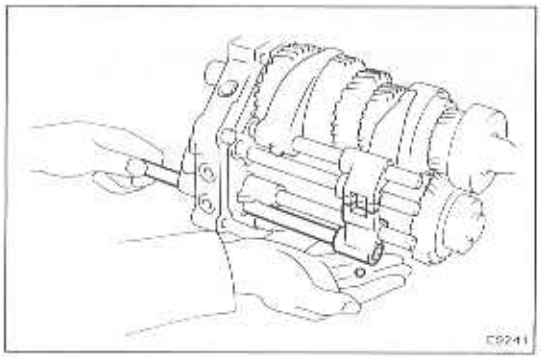

(b) Remove shift fork shaft No. 4.

(c) Remove the ball from reverse shift head.

(d) Remove shift fork No. 3.

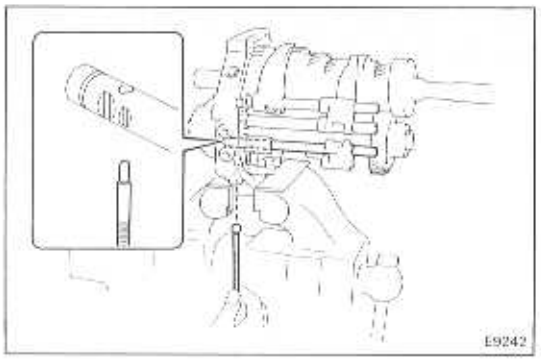

13. REMOVE SHIFT FORK SHAFT NO. 3 REVERSE SHIFT HEAD AND FORK

(5-Speed)

(a) Using a magnetic finger, remove interlock ball No. 1.

(5-speed)

(b) Using a magnetic finger, remove interlock pin No. 2 from No. 3 shift fork shaft.

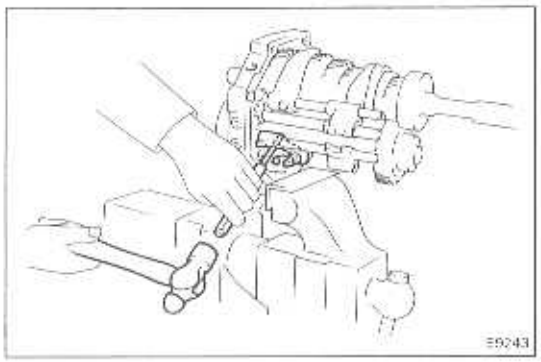

(c) Using a pin punch and a hammer, drive out the slotted spring pin from reverse shift fork.

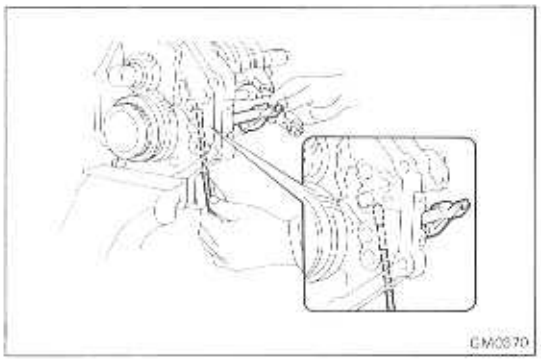

(d) Remove shift fork shaft No. 3 and reverse shift head.

(e) Remove interlock pin No.1.

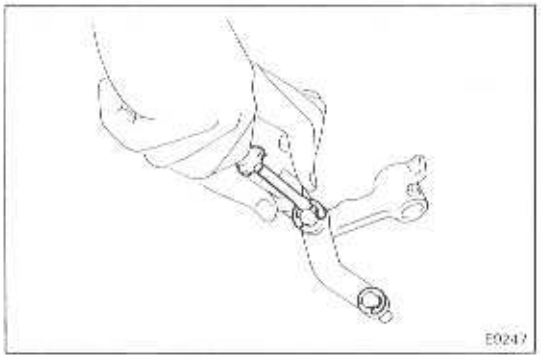

(f) Remove reverse shift arm and fork.

(g) Using a screwdriver, remove two E-rings.

(h) Separate shift arm fork and shoe.

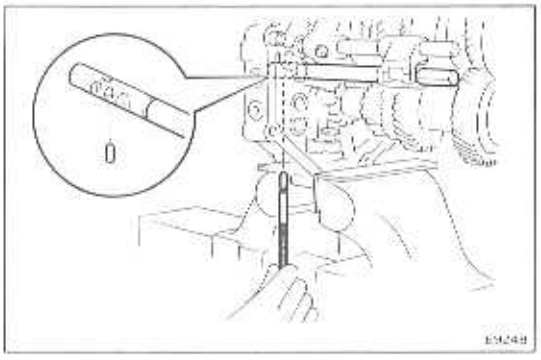

14. REMOVE SHIFT FORK SHAFT NO. 2

(a) Using a magnetic finger, remove interlock pin No. 2 from No. 2 shift fork shaft.

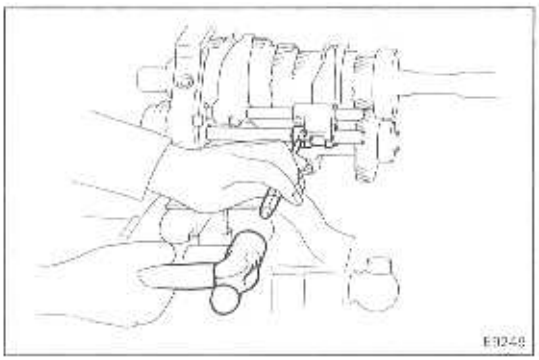

(b) Using a pin punch and a hammer, drive out the slotted spring pin from No. 2 shift fork.

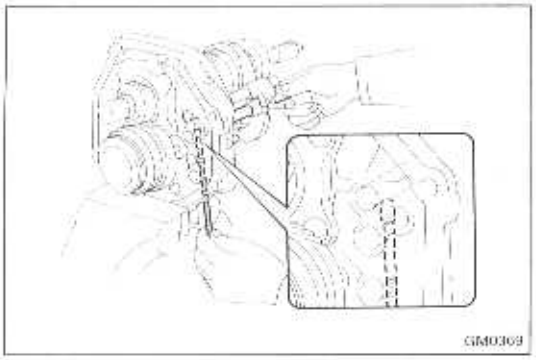

(c) Remove No. 2 shift fork shaft.

(d) Using a magnetic finger, remove interlock pin No. 1.

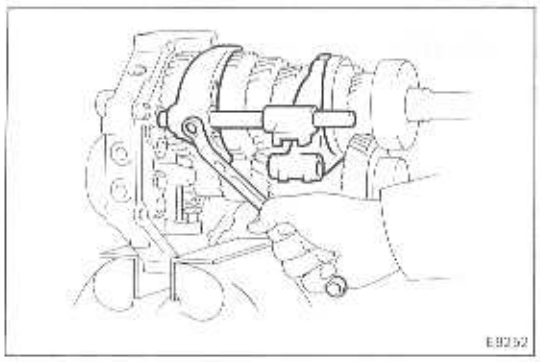

15. REMOVE SHIFT FORK NO. 1, SHIFT FORK SHAFT NO. 1 AND FIRST AND SECOND SHIFT HEAD

(a) Remove shift fork No. 1 set bolt and shift fork shaft No. 1.

(b) Remove shift fork No. 1 and No. 2.

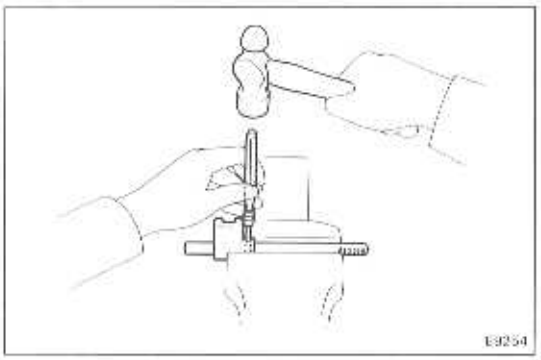

(c) Using a pin punch and a hammer, drive out the slotted spring pin from 1st and 2nd shift head.

(d) Remove 1st and 2nd shift head from shaft.

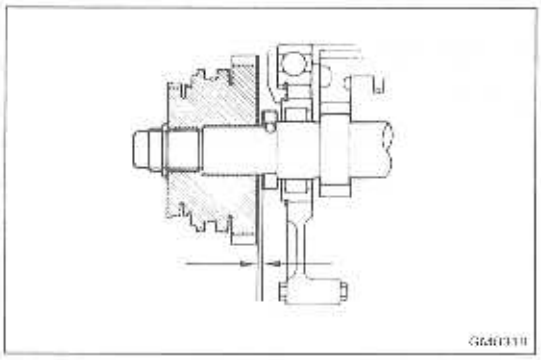

16. (5-Speed)
MEASURE COUNTER FIFTH GEAR THRUST CLEARANCE

Using a feeler gauge, measure the counter 5th gear thrust clearance.

Standard clearance:	**0.10 — 0.30 mm (0.0039 — 0.0118 in.)**
Maximum clearance:	**0.30 mm (0.0118 in.)**

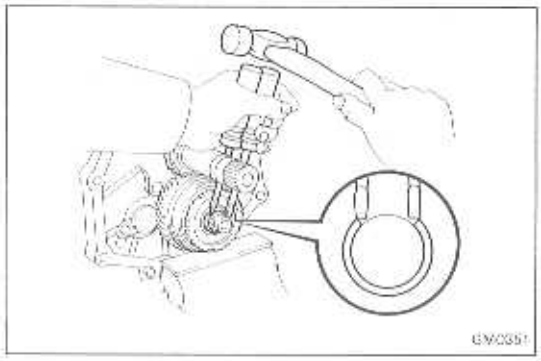

17.-1 (5-Speed)
REMOVE GEAR SPLINE PIECE NO. 5, SYNCHRONIZER RING, NEEDLE ROLLER BEARINGS AND COUNTER FIFTH GEAR WITH HUB SLEEVE NO. 3

(a) Using two screwdrivers and a hammer, top out the snap ring.

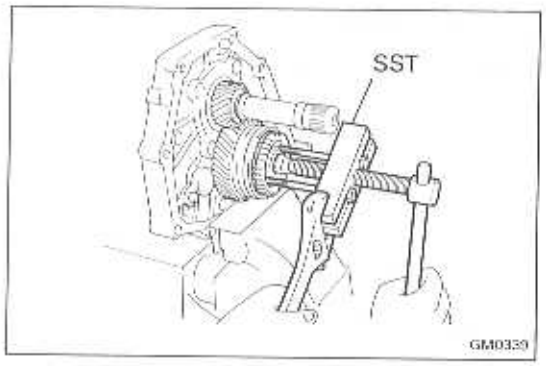

(b) Using SST, remove gear spline piece No. 5.

SST 09213-60017
(09213-00020, 09213-00030, 09213-00060)

(c) Remove, synchronizering needle roller bearing and counter 5th gear.

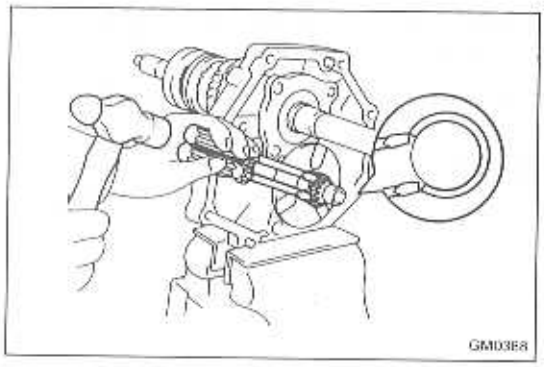

17.-2 (4-Speed)
REMOVE OIL SEPARATOR

(a) Using two screwdrivers and a hammer, tap out the snap ring.

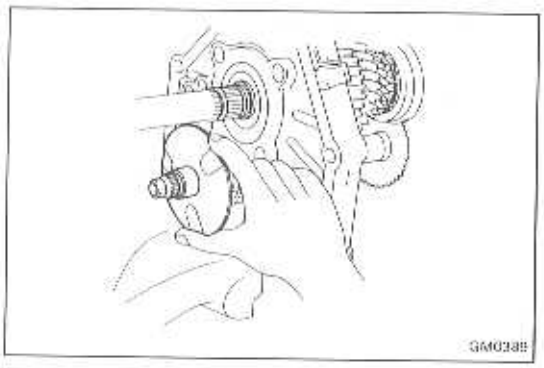

(b) Remove oil separator.

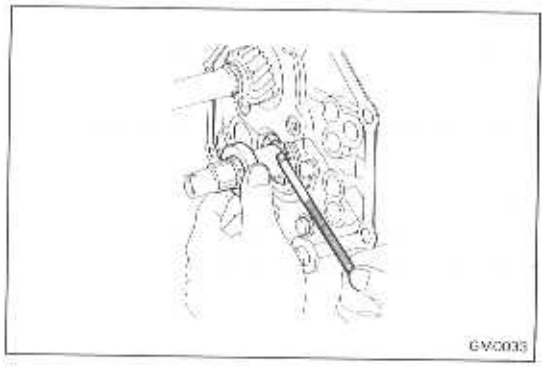

18. (5-Speed)
REMOVE SPACER AND BALL

(a) Remove the spacer.

(b) Using a magnetic finger, remove the ball.

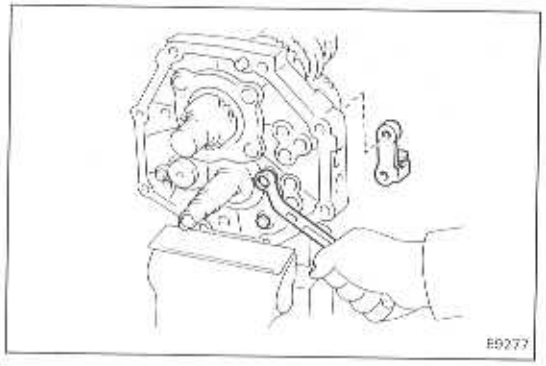

19. REMOVE REVERSE SHIFT ARM BRACKET

Remove the two bolts and the reverse shift arm bracket.

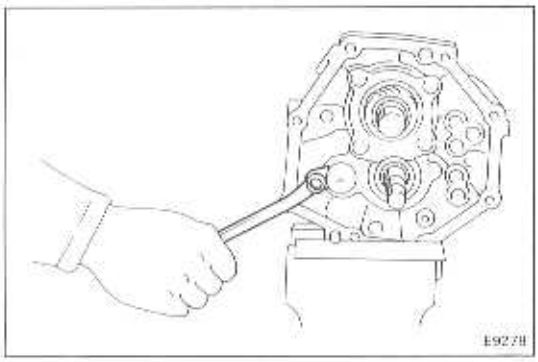

20. REMOVE REVERSE IDLER GEAR AND SHAFT

(a) Remove the reverse idler gear shaft stopper set bolt and remove stopper.

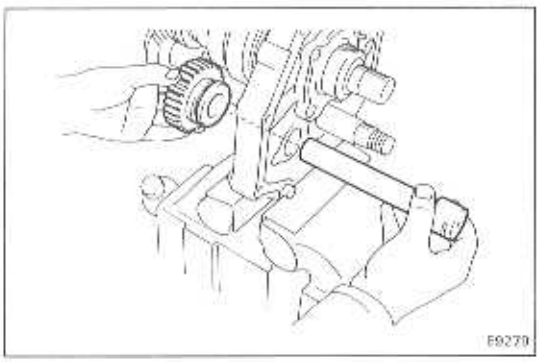

(b) Remove the reverse idler gear and shaft.

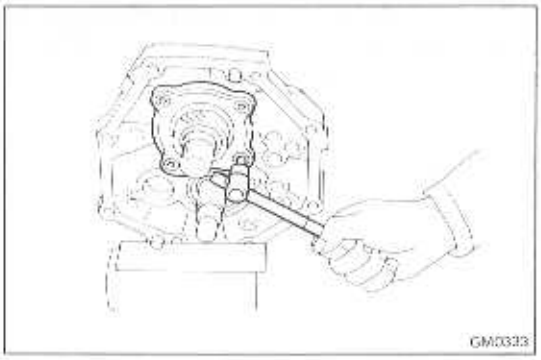

21. REMOVE REAR BEARING RETAINER

Using a torx socket wrench, remove the four bolts.
(Torx socket wrench T40 09042-00020)

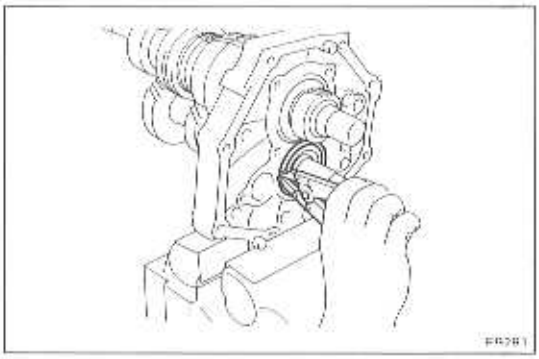

22. REMOVE COUNTER GEAR

(a) Using a snap ring pliers, remove counter gear rear bearing snap ring.

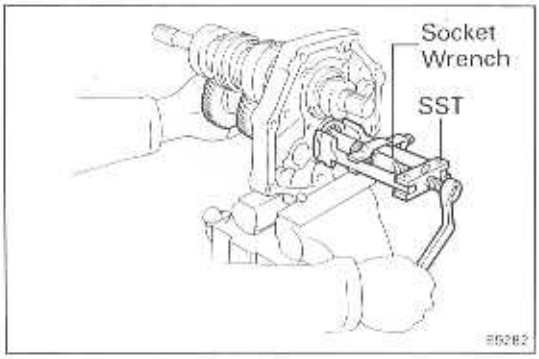

(b) Using SST and 12 mm socket wrench, remove counter gear rear bearing.

SST 09602-35011

(c) Remove counter gear.

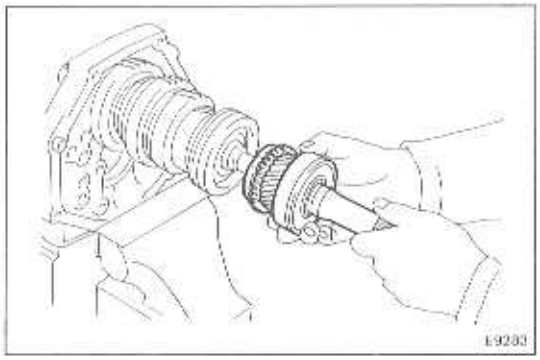

23. REMOVE INPUT SHAFT

Remove input shaft with the 13 needle rooler bearing and synchronizering from output shaft.

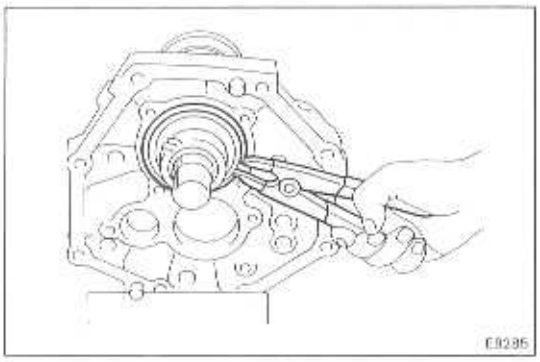

24. REMOVE OUTPUT SHAFT

(a) Using snap ring pliers, remove output shaft center bearing snap ring.

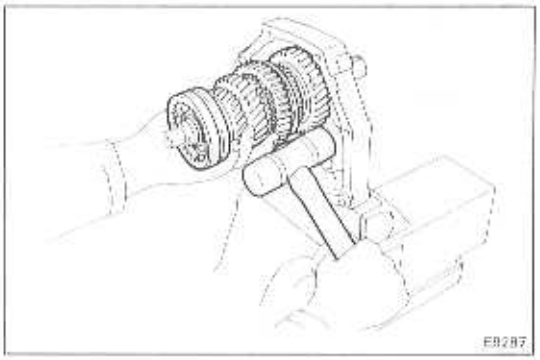

(b) Remove the output shaft from the intermediate plate by pulling on the output shaft and tapping on the intermediate plate with plastic hammer.

DISASSEMBLY OF TRANSMISSION (DIRECT SHIFT TYPE)

1. **REMOVE RELEASE FORK AND BEARING**

2. **REMOVE BACK-UP LIGHT SWITCH, SPEEDOMETER DRIVEN GEAR (2WD)**

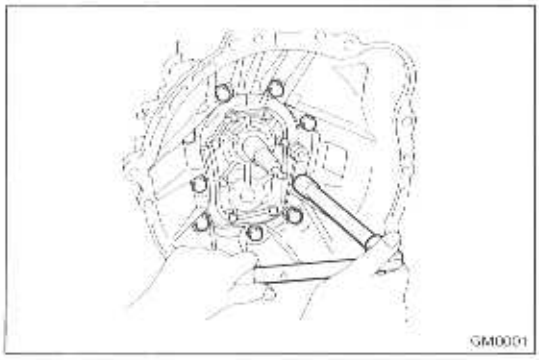

3. **REMOVE CLUTCH HOUSING FROM TRANSMISSION CASE**

   Remove the nine bolts.

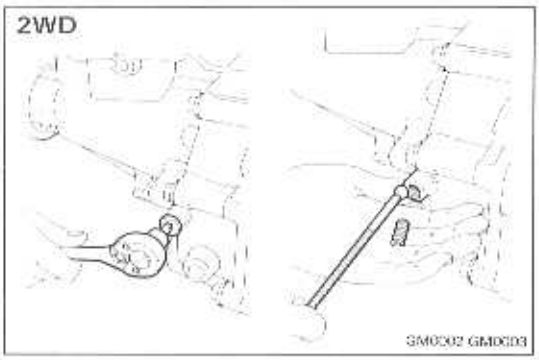

4.-1 (2WD)
REMOVE STRAIGHT SCREW PLUG, SPRING AND BALL

(a) Using a torx socket wrench, remove the screw plug from the extension housing.
(Torx socket wrench T40 09042-00020)

(b) Using a magnetic finger, remove the spring and ball.

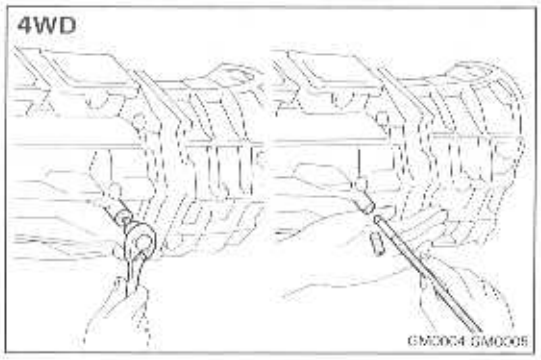

4.-2 (4WD)
REMOVE STRAIGHT SCREW PLUG, SJPRING AND BALL

(a) Using a torx socket wrench, remove the screw plug from the transfer adaptor.
(Torx socket wrench T40 09042-00020)

(b) Using a magnetic finger, remove the spring and ball.

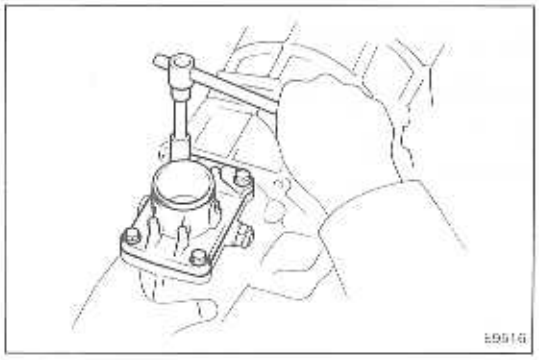

5.-1 (2WD)
REMOVE SHIFT LEVER CONTROL RETAINER

Remove the four bolts, and remove shift lever control retainer.

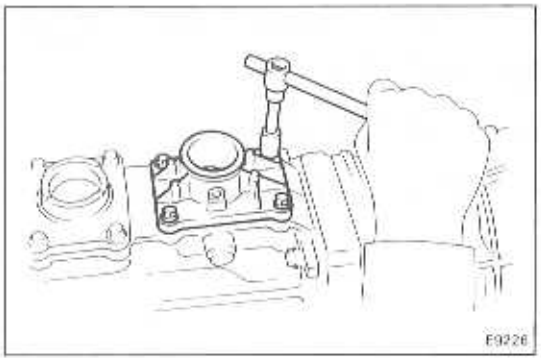

5.-2 (4WD)
REMOVE SHIFT LEVER CONTROL RETAINER

(a) Remove four bolts and remove transmission shift lever control retainer.

(b) Remove four bolts and remove transfer shift lever control retainer.

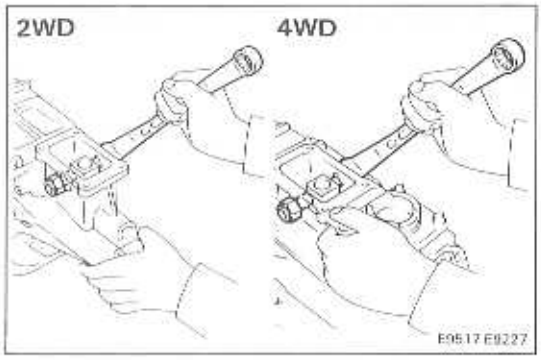

6. **REMOVE RESTRICT PINS**

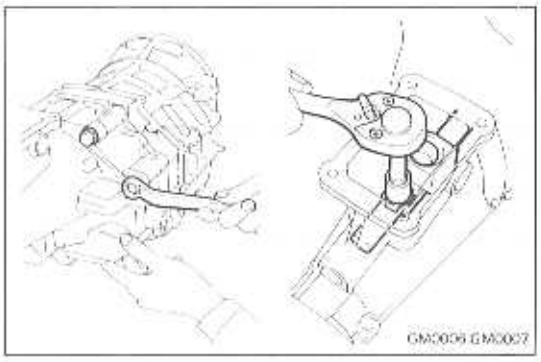

7.-1 (2WD)
REMOVE EXTENSION HOUSING

(a) Remove the eight bolts.

(b) Remove the shift lever housing set bolt.

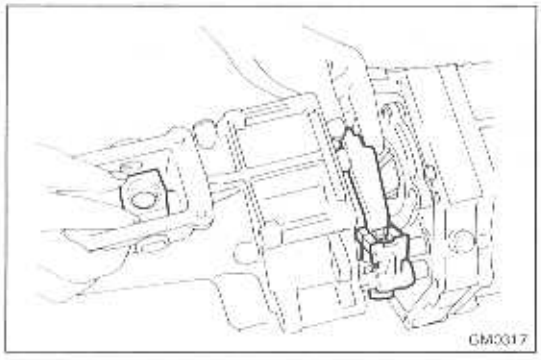

(c) Using a plastic hammer, tap the extension housing and remove the shift lever housing and the shift and select lever.

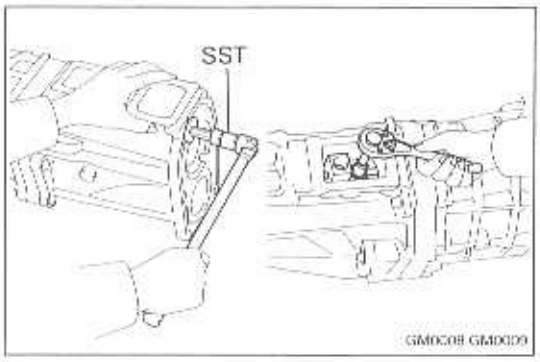

7.-2 (4WD)
REMOVE TRANSFER ADAPTOR

(a) Using SST, remove the plug from the transfer adaptor.

SST 09923-00010

(b) Remove the shift lever housing set bolt.

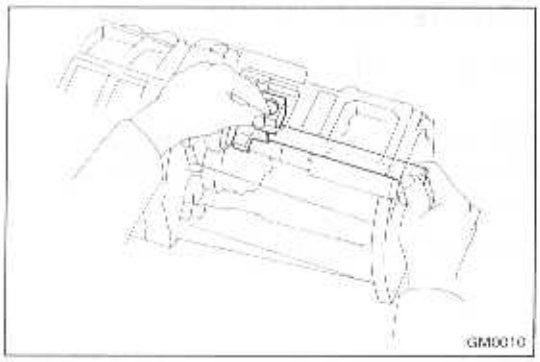

(c) Remove the shift lever shaft and housing.

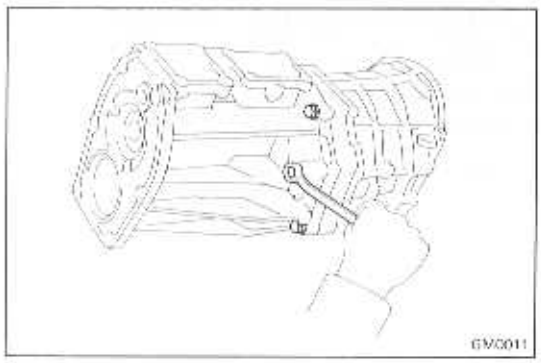

(d) Remove the eight bolts.

(e) Using a plastic hammer, remove the transfer adaptor.

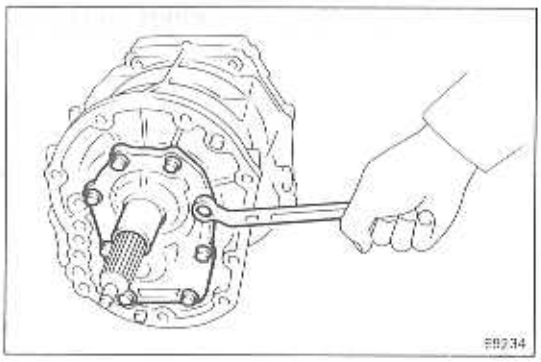

8. REMOVE FRONT BEARING RETAINER

Remove the eight bolts, and remove front bearing retainer and gasket.

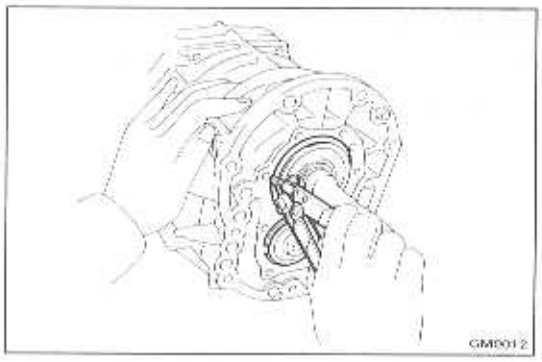

9. REMOVE TWO BEARING SNAP RINGS

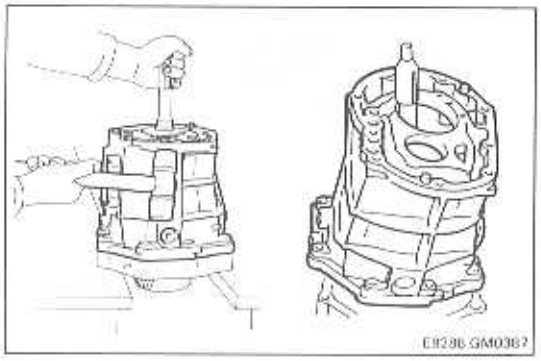

10. SEPARATE INTERMEDIATE PLATE FROM TRANSMISSION CASE

(a) Stand the transmission as shown.

(b) Using a plastic hammer, carefully tap off the transmission case.

(c) Remove the transmission case from the intermediate plate as shown.

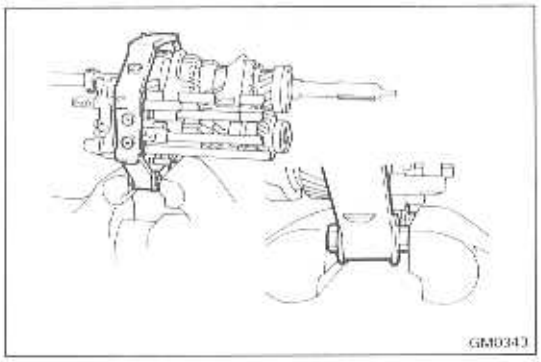

11. MOUNT INTERMEDIATE PLATE IN VISE

(a) Use two clutch housing bolts, plate washers and suitable nuts as shown.

NOTICE: Install the plate washers in reverse of normal. Increase or decrease plate washers so that tht bolt tip and front tip surface of the nut are aligned.

(b) Mount the intermediate plate in a vise.

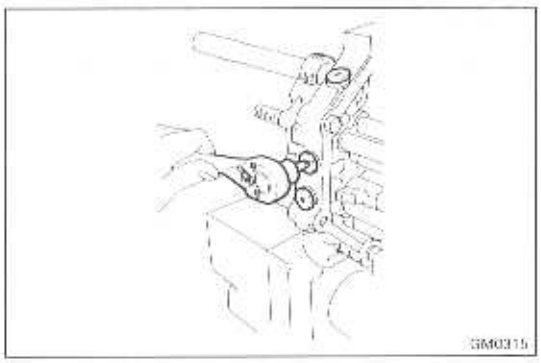

12. REMOVE STRAIGHT SCREW PLUGS, LOCKING BALLS AND SPRINGS

(a) Using a torx socket wrench, remove the plugs. (Torx socket wrench T40 09042-00020)

4-Speed: Three plugs
5-Speed: Four plugs

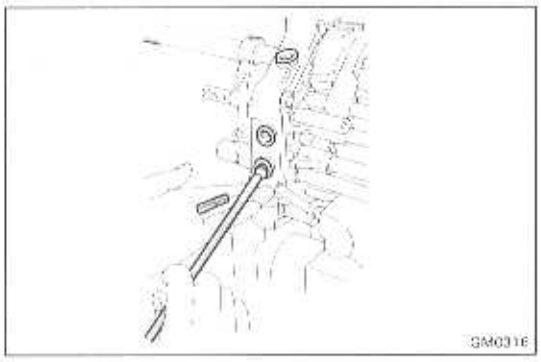

(b) Usding amagnetic finter, remove the springs and balls.

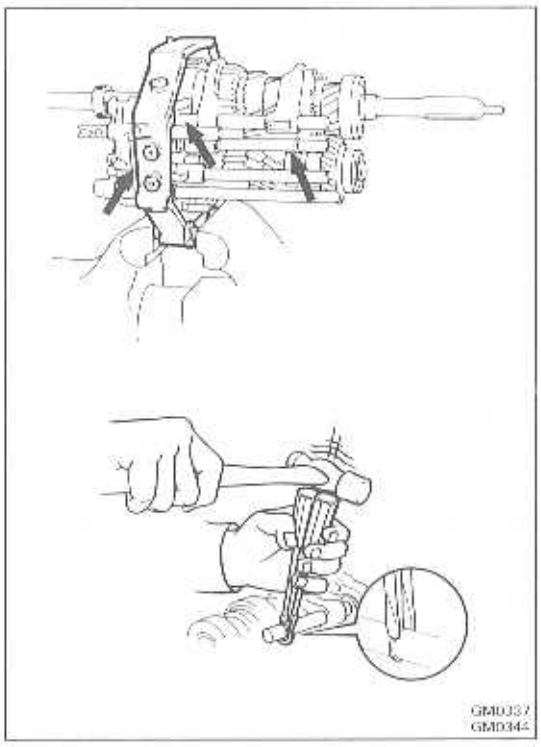

13. REMOVE SHIFT FORK SHAFT R-RINGS

Using two screwdrivers and a hammer drive out snap rings.

5-Speed: Three snap rings
4-Speed: Four snap rings

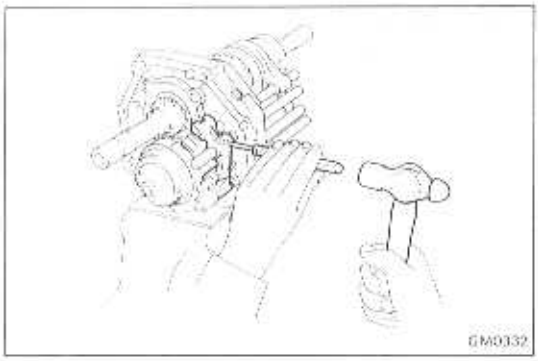

14. REMOVE SHIFT FORK SHAFT NO. 5

(a) Using a pin punch and a hammer, drive out the slotted spring pin.

(b) Remove the shift fork shaft No. 5.

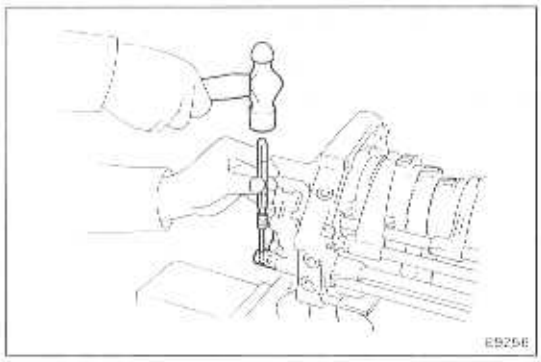

15. REMOVE SHIFT FORK NO. 3 SHIFT FORK SHAFT NO. 4 AND REVERSE SHIFT HEAD

(a) Using a pin punch and a hammer, drive out the slotted spring pin.

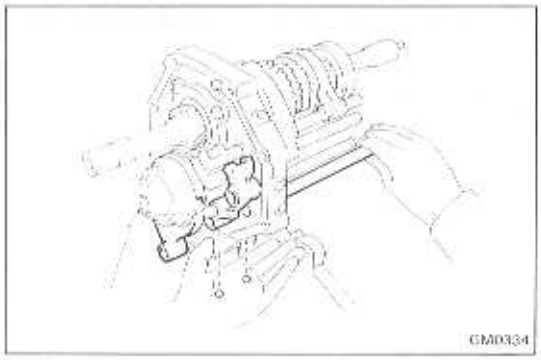

(b) Remove the shift fork No. 3, shift fork shaft No. 4 and reverse shift head.

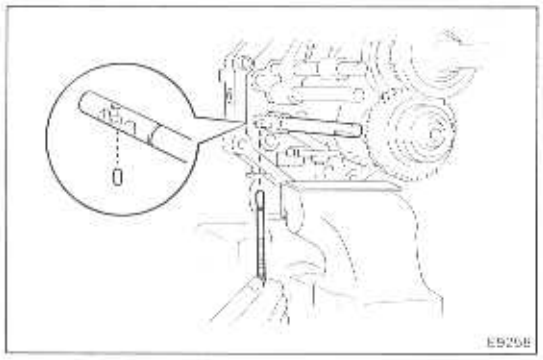

16. REMOVE REVERSE SHIFT ARM AND REVERSE SHIFT FORK AND SHIFT FORK SHAFT NO. 3

(a) Using a magnetic finger, remove the interlock pin from shift frok shaft No. 3.

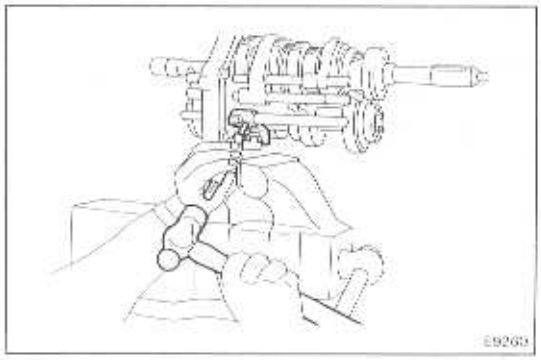

(b) Using a pin punch and a hammer, drive out the slotted spring pin.

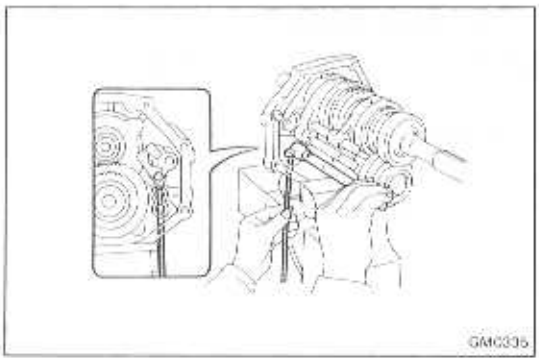

(c) Remove shift fork shaft No. 3.

(d) Remove interlock pin No. 1.

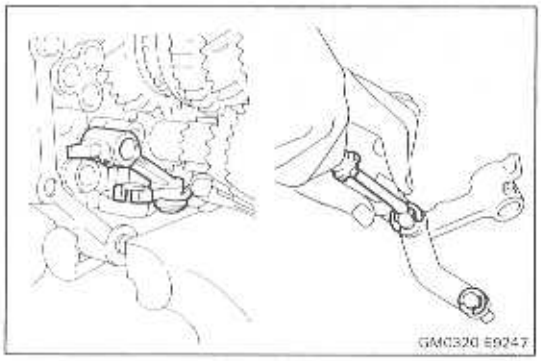

(e) Remove reverse shift arm and fork.

(f) Using a screwdriver, remove two E-rings.

(g) Separate shift arm, fork and shoe.

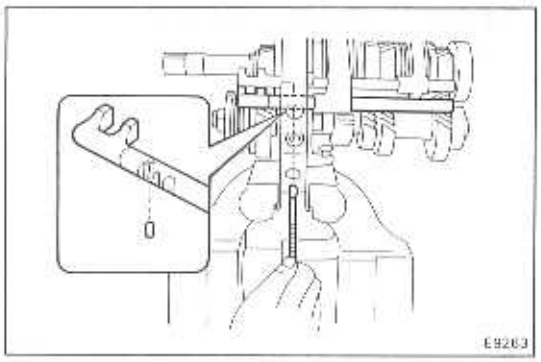

17. REMOVE SHIFT FORK SHAFT No. 1, No. 2 AND SHIFT FORK NO. 1, NO. 2

(a) Using a magnetic finger, remove interlock pin No. 2 from shift fork shaft No. 2.

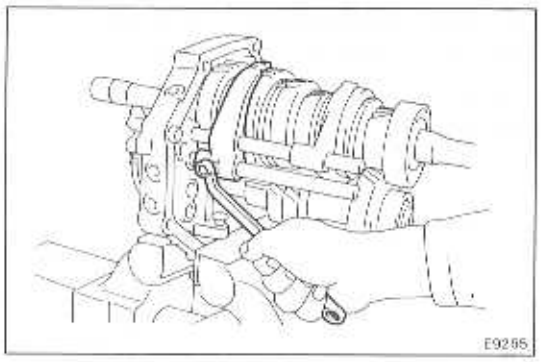

(b) Remove shift fork No. 1 set bolt.

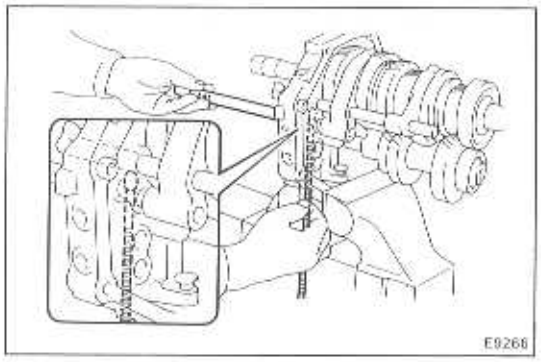

(c) Remove shift fork shaft No. 1.

(d) Remove interlock pin No. 1.

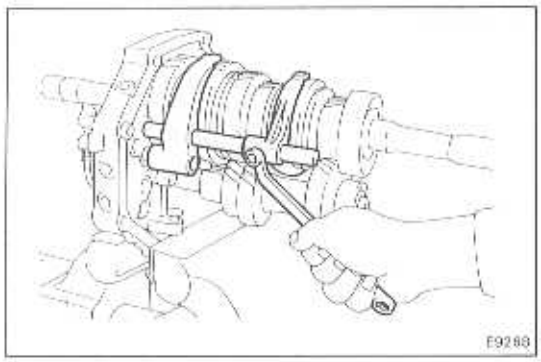

(e) Remove shift fork No. 2 set bolt.

(f) Remove shift fork No. 1, No. 2 and shift fork shaft No. 2.

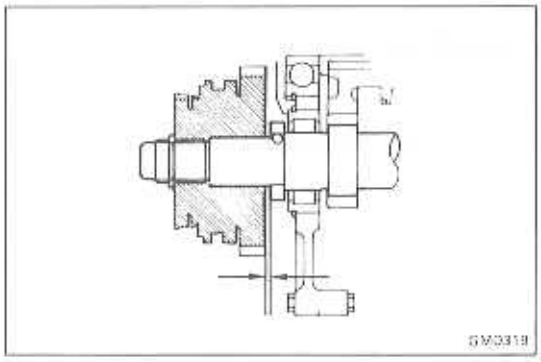

18. (5-Speed)
MEASURE COUNTER FIFTH GEAR THRUST CLEARANCE

Using a feeler gauge, measure the counter 5th gear thrust clearance.

Standard clearance:	**0.10 — 0.30 mm (0.0039 — 0.0118 in.)**
Maximum clearance:	**0.30 mm (0.0118 in.)**

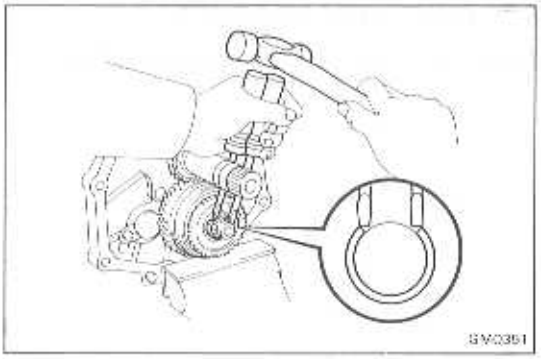

19.-1 (5-Speed)
REMOVE GEAR SPLINE PIECE NO. 5 SYNCHRONIZER RING, NEEDLE ROLLER BEARINGS AND COUNTER FIFTH GEAR WITH HUB SLEEVE NO. 3

(a) Using two screwdrivers and a hammer, tap out the snap ring.

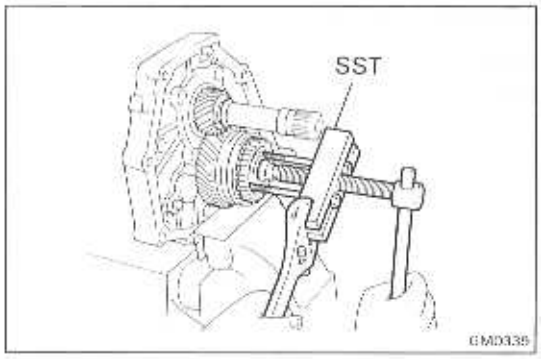

(b) Using SST, remove gear spline piece No. 5.

SST 09213-60017 (09213-00020, 09213-00030, 09213-00060)

(c) Remove synchronizering needle roller bearing and counter 5th gear.

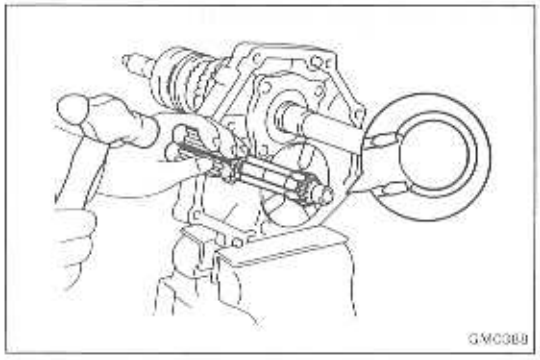

19.-2 (4-Speed)
REMOVE OIL SEPARATOR

(a) Using two screwdrivers and a hammer, tap out the snap ring.

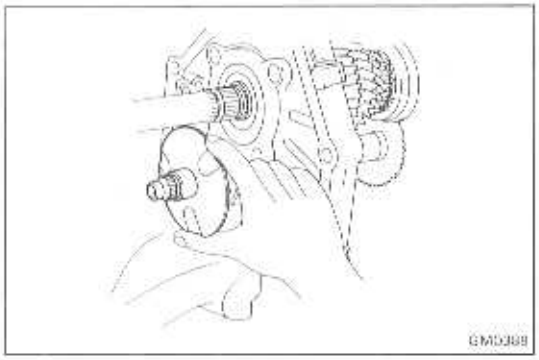

(b) Remove oil separator.

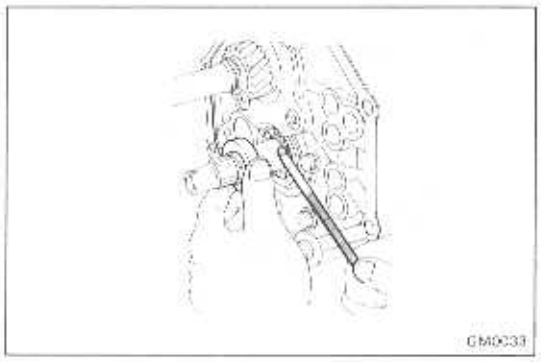

20. (5-Speed)
REMOVE SPACER AND BALL

(a) Remove the spacer.

(b) Using a magnetic finger, remove the ball.

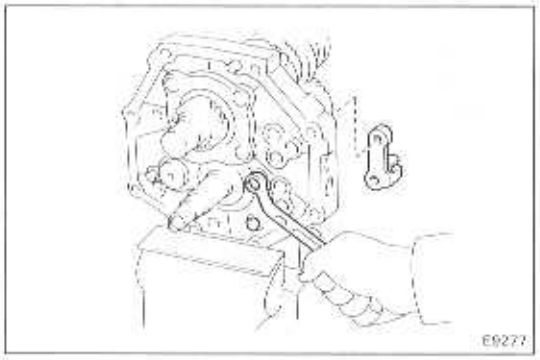

21. REMOVE REVERSE SHIFT ARM BRACKET

Remove the two bolts and the reverse shift arm bracket.

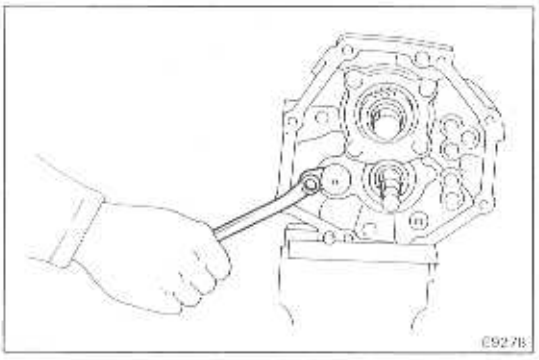

22. REMOVE REVERSE IDLER GEAR AND SHAFT

(a) Remove the reverse idler gear shaft stopper set bolt and remove stopper.

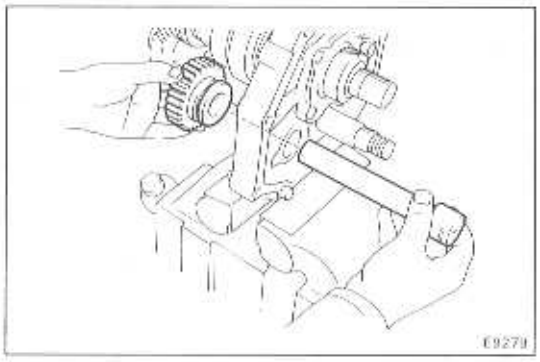

(b) Remove the reverse idler gear and shaft.

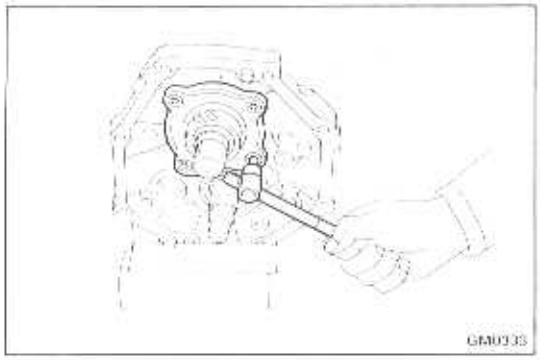

23. REMOVE REAR BEARING RETAINER

Using a torx socket wrench, remove the four bolts.
(Torx socket wrench T40 09042-00020)

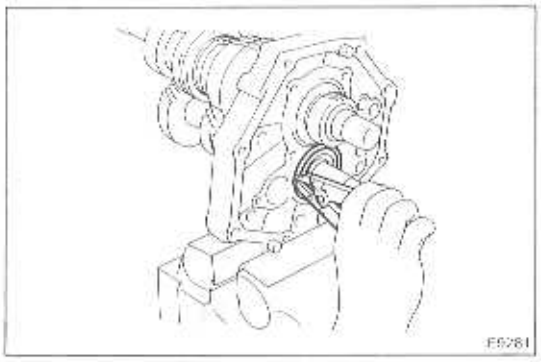

24. REMOVE COUNTER GEAR

(a) Using a snap ring pliers, remove counter gear rear bearing snap ring.

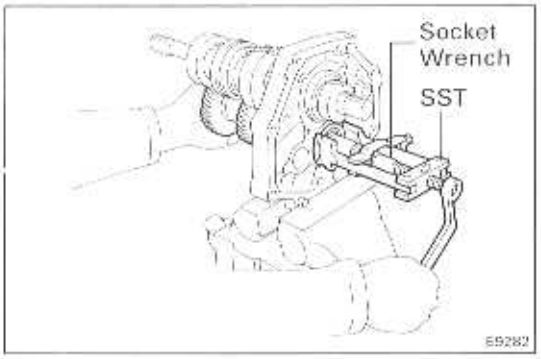

(b) Using SST and 12 mm socket wrench, remove counter gear rear bearing.

SST 09602-35011

(c) Remove counter gear.

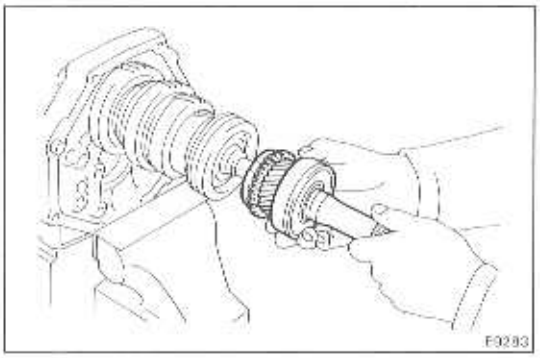

25. REMOVE INPUT SHAFT

Remove input shaft with the 13 needle roller bearing and synchronizer ring from output shaft.

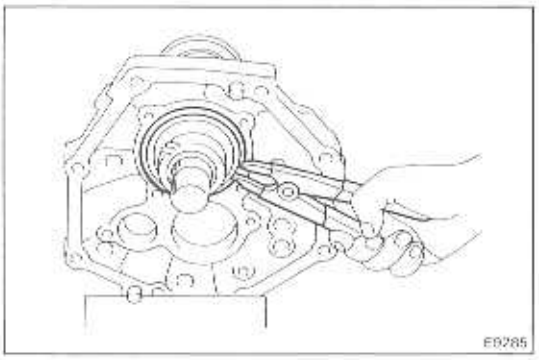

26. REMOVE OUTPUT SHAFT

(a) Using snap ring pliers, remove output shaft center bearing snap ring.

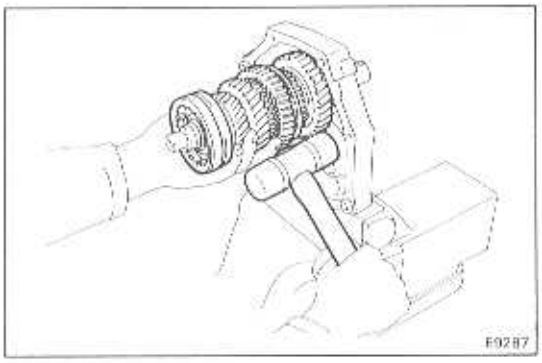

(b) Remove the output shaft from the intermediate plate by pulling on the output shaft and tapping on the intermediate plate with plastic hammer.

COMPONENT PARTS

Input Shaft Assembly

COMPONENT

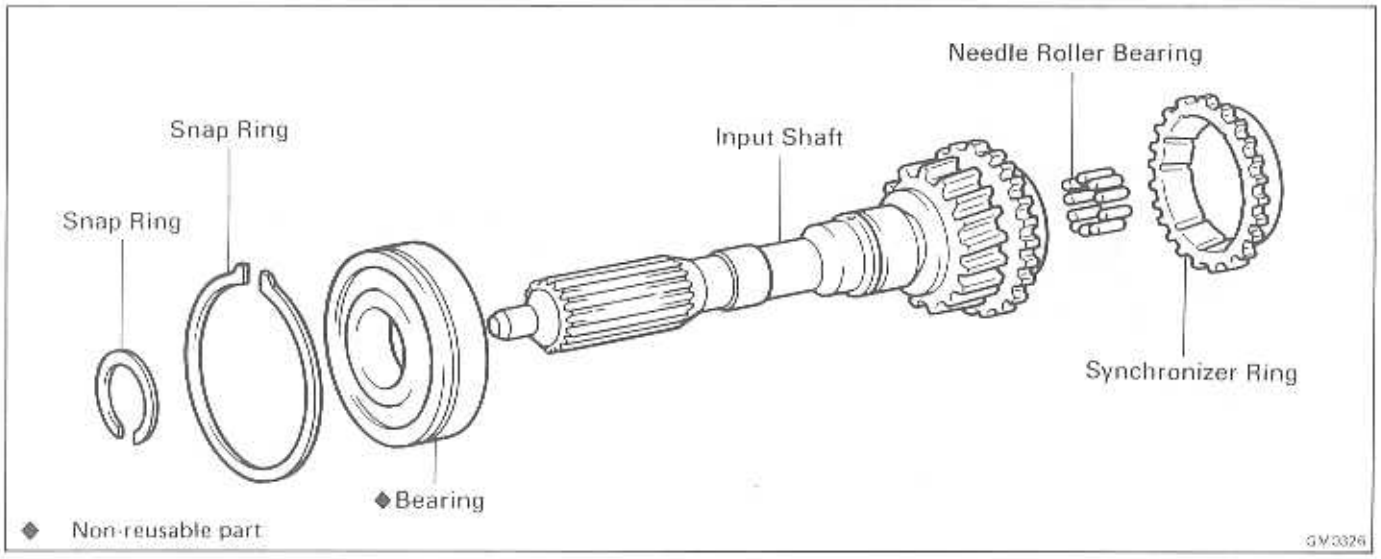

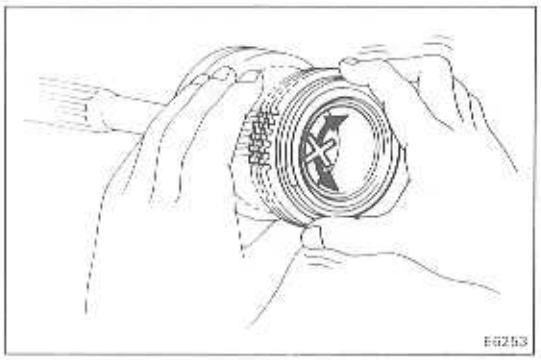

INSPECTION OF INPUT SHAFT ASSEMBLY

1. **INSPECT SYNCHRONIZER RING**

   (a) Turn the ring and push it into check braking action.

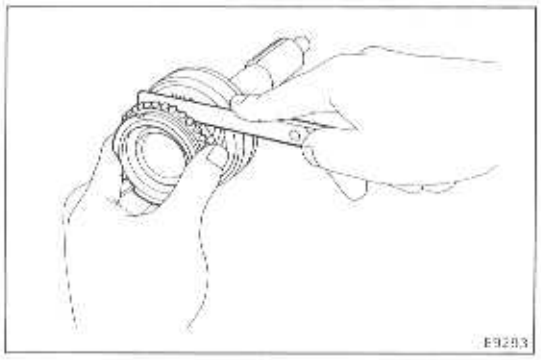

   (b) Measure the clearance between the synchronizer ring back and the gear spline end.

   Standard clearance: **1.0 — 2.0 mm (0.040 — 0.079 in.)**
   Mimimum clearance: **0.8 mm (0.031 in.)**

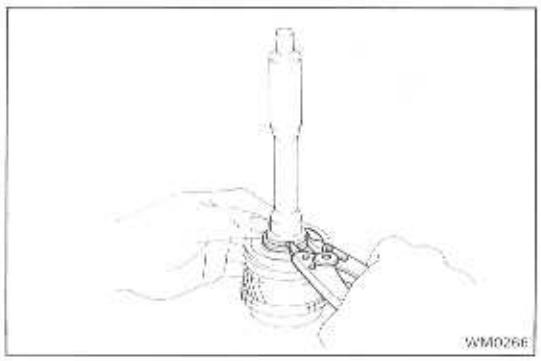

REPLACEMENT OF BEARING

IF NECESSARY, REPLACE INPUT SHAFT BEARING

(a) Using snap ring pliers, remove the snap ring.

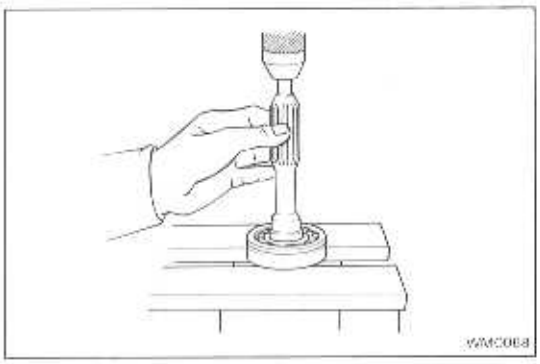

(b) Using a press, remove the bearing.

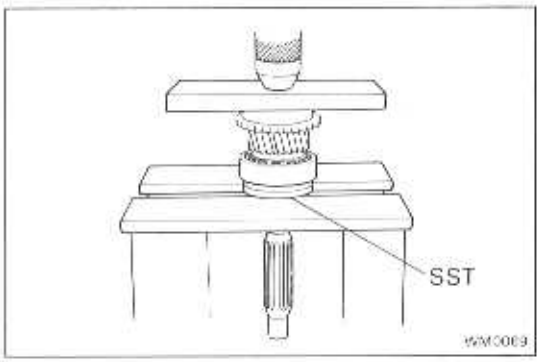

(c) Using a press and SST, Install a new bearing.
SST 09506-35010

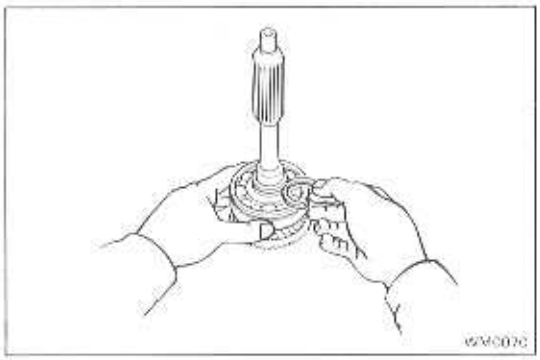

(d) Select a snap ring that will allow minimum axial play.

Mark	Thickness mm (in.)
0	2.05 — 2.10 (0.0807 — 0.0827)
1	2.10 — 2.15 (0.0827 — 0.0846)
2	2.15 — 2.20 (0.0846 — 0.0866)
3	2.20 — 2.25 (0.0866 — 0.0886)
4	2.25 — 2.30 (0.0886 — 0.0906)
5	2.30 — 2.35 (0.0906 — 0.0925)

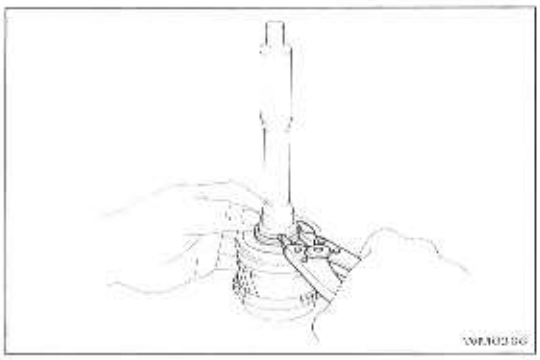

(e) Using snap ring pliers, install the snap ring.

Output Shaft Assembly

COMPONENT

Hub Sleeve No. 2
Shifting Key
Needle Roller Bearing
Shifting Key Spring
Snap Ring
3rd Gear
Ball
Synchronizer Ring
Ball
(2WD)
Clutch Hub No. 2
Output Shaft
Ball
(4WD)
1st Gear
Snap Ring
Needle Roller Bearing
Shifting Key
Bearing
Shifting Key Spring
Hub Sleeve No. 1
Inner Race
(4WD)
Synchronizer Ring
(2WD)
Snap Ring
(5-Speed)
Needle Roller Bearing
Sleeve
Snap Ring
2nd Gear
5th Gear
Speedometer Drive Gear
Synchronizer Ring

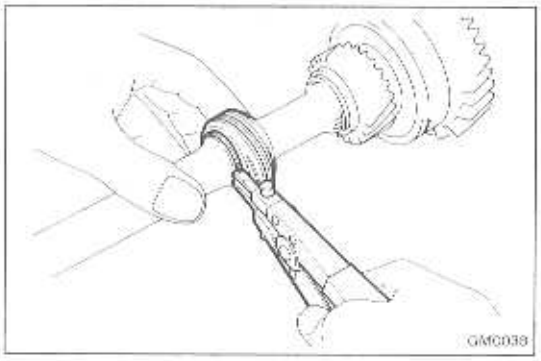

DISASSEMBLY OF OUTPUT SHAFT ASSEMBLY

1.-1 (2WD)
REOVE SPEEDOMETER DRIVE GEAR

(a) Using snap ring pliers, remove the snap ring.

(b) Remove the speedometer drive gear and ball.

(c) Using a magnetic finger, remove the steel ball.

(d) Using snap ring pliers, remove the snap ring.

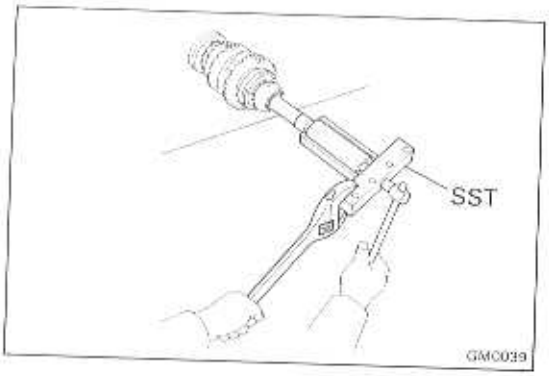

1.-2 (4WD)

REMOVE SLEEVE FROM OUTPUT SHAFT

Using SST, remove the sleeve from the output shaft.

SST 09950-20017

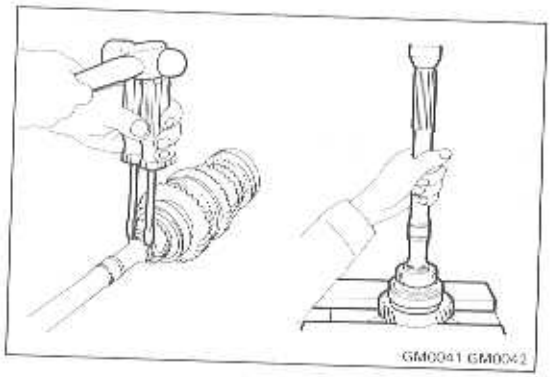

2.-1 (5-Speed)

REMOVE FIFTH GEAR, REAR BEARING, FIRST GEAR, INNER RACE AND NEEDLE ROLLER BEARING

(a) Using two screwdrivers and a hammer, tap out the snap ring.

(b) Using a press, remove the 5th gear, rear bearing, 1st gear and inner race.

(c) Remove the needle roller bearing.

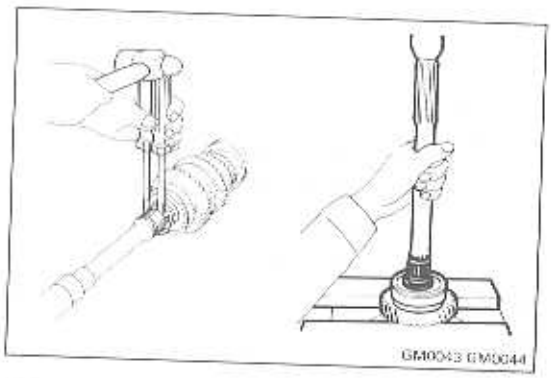

2.-2 (4-Speed)

REMOVE REAR BEARING, FIRST GEAR, INNER RACE AND NEEDLE ROLLER BEARING

(a) Using two screwdrivers and a hammer, tap out the snap ring.

(b) Using a press, remove the rear bearing, 1st gear and inner race.

(c) Remove the needle roller bearing.

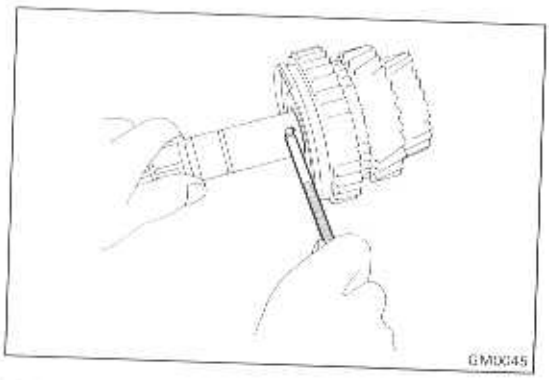

3. REMOVE SYNCHRONIZER RING

4. REMOVE LOCKING BALL

Using a magnectic finger, remove the locking ball.

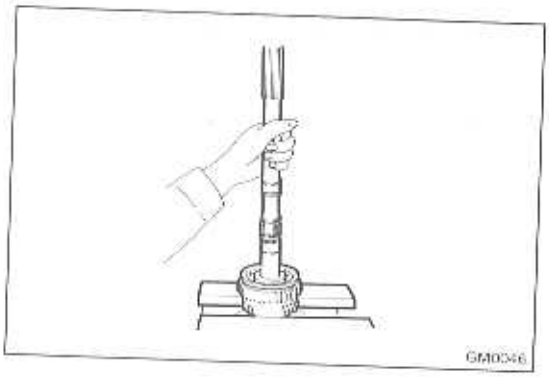

5. REMOVE HUB SLEEVE NO. 1 ASSEMBLY, SYNCHRONIZER RING, SECOND GEAR AND NEEDLE ROLLER BEARING

(a) Using a press, remove hub sleeve No. 1, the synchronizer ring and 2nd gear.

(b) Remove the needle roller bearing.

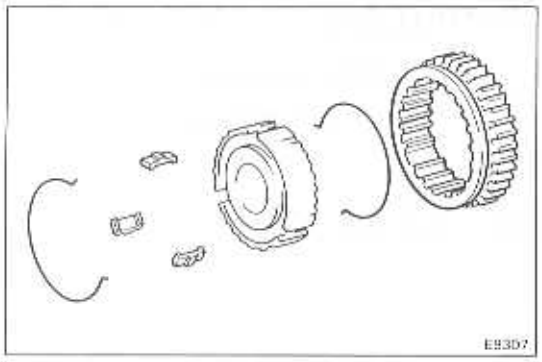

6. **REMOVE, HUB SLEEVE NO. 1 SHIFTING KEYS AND SPRINGS FROM CLUTCH HUB NO. 1**

Using a screwdriver, remove the three shifting keys and two springs from clutch hub No. 1.

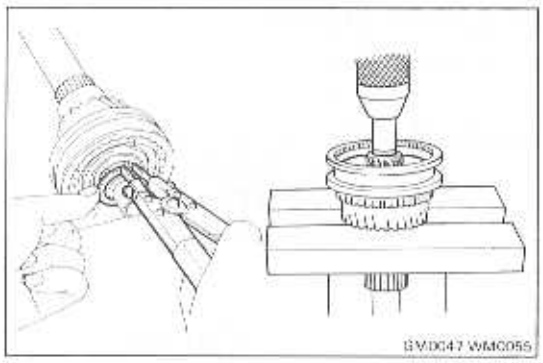

7. **REMOVE HUB SLEEVE NO. 2 ASSEMBLY, SYCHRONIZER RING, THIRD GEAR AND NEEDLE ROLLER BEARING**

(a) Using snap ring plier, remove the snap ring.

(b) Using a press, remove hub sleeve No. 2, the synchronizer ring and 3rd gear.

(c) Remove the needle roller bearing.

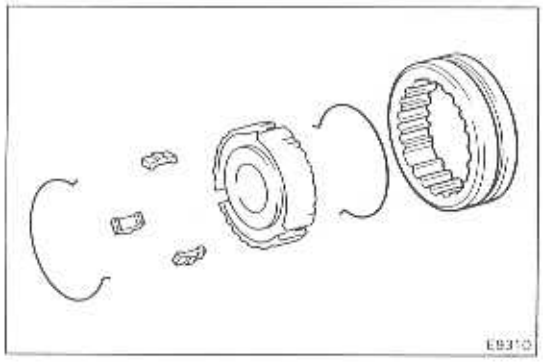

8. **REMOVE HUB SLEEVE NO. 2, SHIFTING KEYS AND SPRINGS FROM CLUTCH HUB NO. 2**

Using a screwdriver, remove the three shifting keys and springs from clutch hub No. 2.

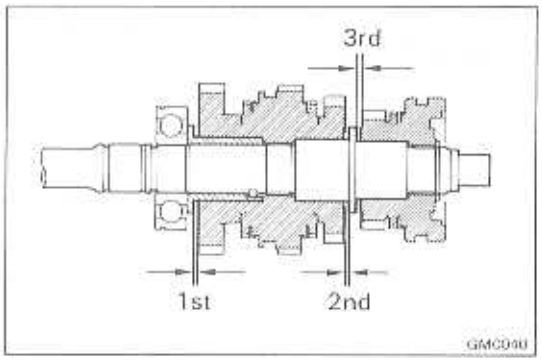

INSPECTION OF OUTPUT SHAFT ASSEMBLY

1. MEASURE EACH GEAR THRUST CLEARANCE

Measure the thrust clearance of each gear.

Standard clearance: 0.10 — 0.25 mm (0.0039 — 0.0098 in.)
Maximum clearance: 0.25 mm (0.0098 in.)

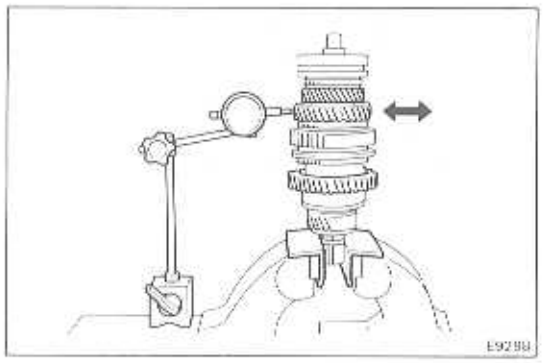

2. MEASURE EACH GEAR OIL CLEARANCE

Using a dial indicator, measure the each gear oil clearance.

Standard clearance:

2nd and 3rd gears	0.0090 — 0.033 mm (0.0004 — 0.0013 in.)
1st gear	0.009 — 0.032 mm (0.0004 — 0.0013 in.)

Maximum clearance:

2nd and 3rd gears	0.033 mm (0.0013 in.)
1st gear	0.032 mm (0.0013 in.)

If the clearance exceeds the limit, replace the gear, needle roller bearing or shaft.

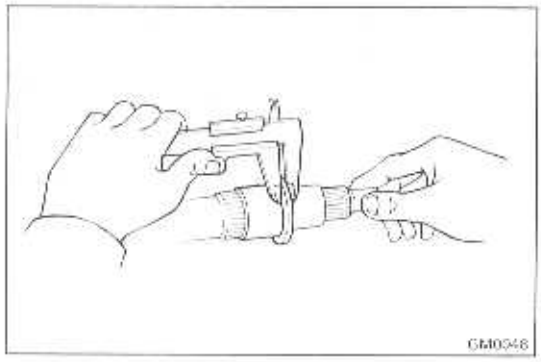

3. INSPECT OUTPUT SHAFT AND INNER RACE

(a) Using calipers, measure the output shaft flange thickness.

Minimum thickness: 4.80 mm (0.1890 in.)

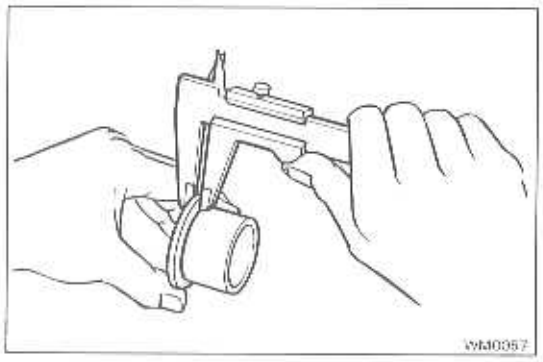

(b) Using calipers, measure the inner race flange thickness.

Minimum thinkness: 3.99 mm (0.1571 in.)

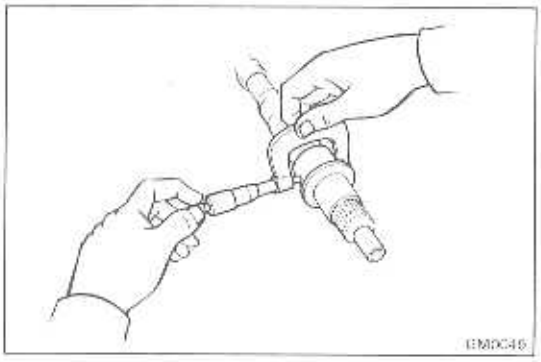

(c) Using a micrometer, measure the outer diameter of the output shaft journal.

Minimum diameter:

2nd gear	37.984 mm (1.4954 in.)
3rd gear	34.984 mm (1.3773 in.)

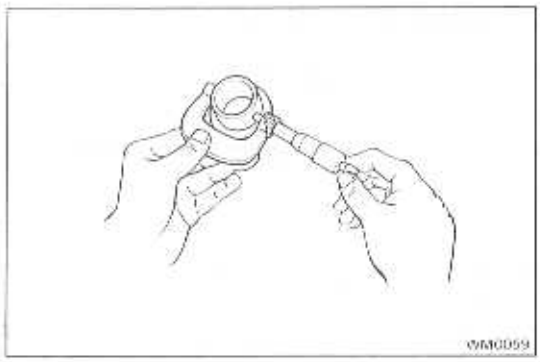

(d) Using a micrometer, measure the outer diameter of the inner race.

Minimum diameter: 38.985 mm (1.5348 in.)

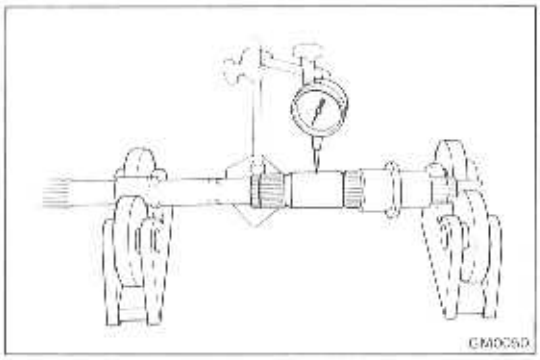

(e) Using a dial indicator, check the shaft runout.

Maximum runout: 0.05 mm (0.0020 in.)

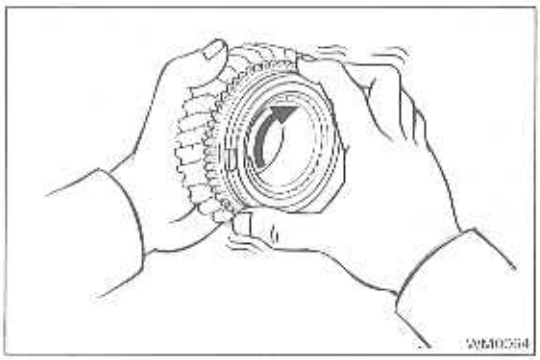

4. INSPCET SYNCHRONIZER RINGS

(a) Turn the ring and push it in to check the braking action.

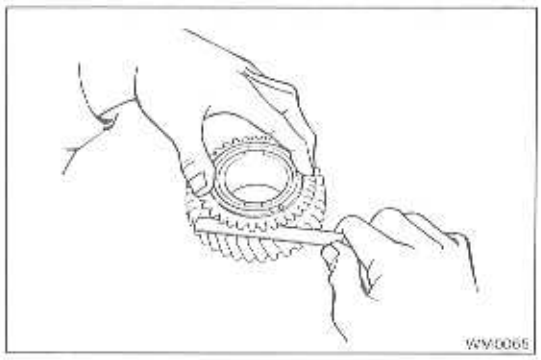

(b) Measure the clearance between the synchronizer ring back and the gear spline end.

Standard clearance: 1.0 — 2.0 mm (0.039 — 0.079 in.)
Minimum clearance: 0.8 mm (0.031 in.)

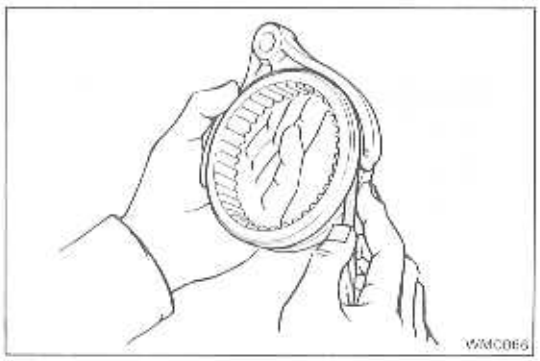

5. MEASURE CLEARANCE OF SHIFT FORKS AND HUB SLEEVES

Using a feeler gauge, measure the clearance between the hub sleeve and shift fork.

Maximum clearance: 1.0 mm (0.039 in.)

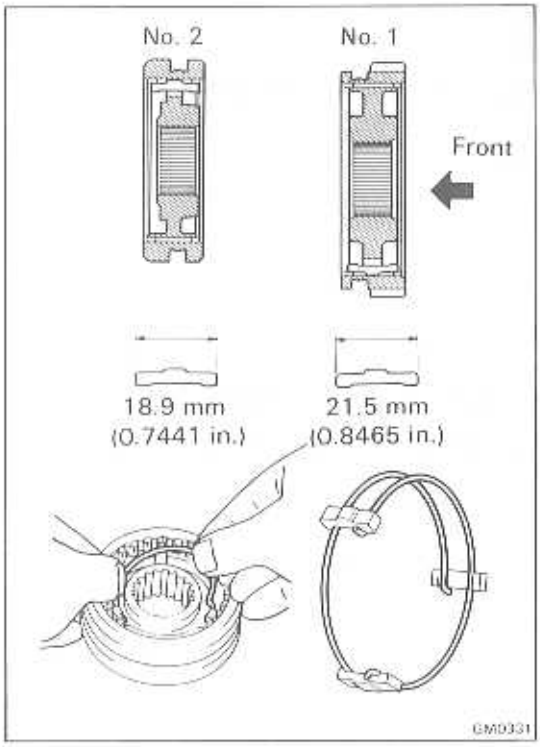

ASSEMBLY OF OUTPUT SHAFT ASSEMBLY

1. INSERT CLUTCH HUB NO. 1 AND NO. 2 INTO HUB SLEEVE

(a) Install the clutch hub and shifting keys to the hub sleeve.

(b) Install the shifting key springs under the shifting keys.

NOTICE: Install the key springs positioned so that their end gaps are not in line.

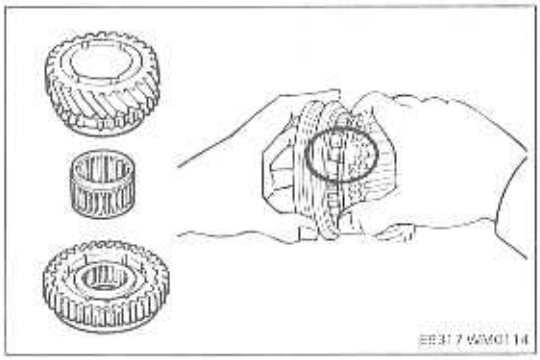

2. INSTALL THIRD GEAR AND HUB SLEEVE NO. 2 ON OUTPUT SHAFT

(a) Apply gear oil to the shaft and needle roller bearing.

(b) Place the synchronizer ring on the gear and align the ring slots with the shifting keys.

(c) Install the needle roller bearing in the 3rd gear.

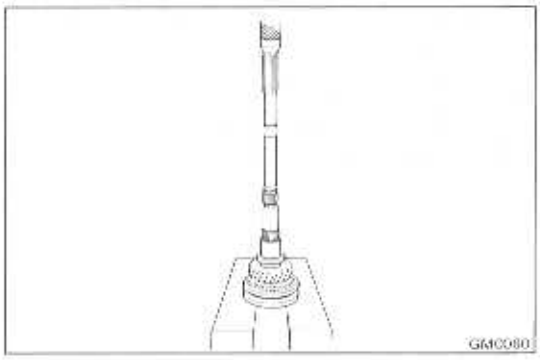

(d) Using a press, install the 3rd gear and hub sleeve No. 2.

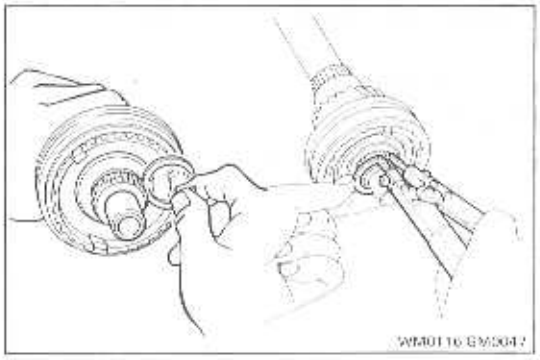

3. INSTALL SNAP RING

Select a snap ring that will allow minimum axial play and install it on shaft.

Mark	Thickness mm (in.)
C-1	1.75 — 1.80 (0.0689 — 0.0709)
D	1.80 — 1.85 (0.0709 — 0.0728)
D-1	1.85 — 1.90 (0.0728 — 0.0748)
E	1.90 — 1.95 (0.0748 — 0.0768)
E-1	1.95 — 2.00 (0.0768 — 0.0787)
F	2.00 — 2.05 (0.0787 — 0.0807)
F-1	2.05 — 2.10 (0.0807 — 0.0827)

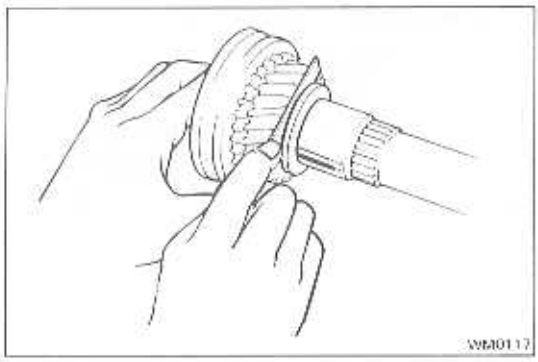

4. **MEASURE THIRD GEAR THRUST CLEARANCE**

Using a feeler gauge, measure the 3rd gear thrust clearance.

Standrad clearance:	**0.10 — 0.25 mm (0.0039 — 0.0098 in.)**
Maximum clearance:	**0.25 mm (0.0098 in.)**

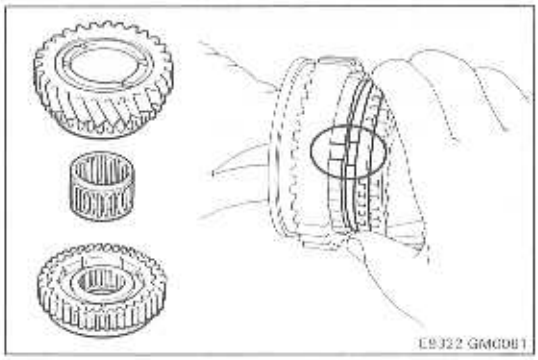

5. **INSTALL SECOND GEAR AND HUB SLEEVE NO. 1**

(a) Apply gear oil to the shaft and needle roller bearing.

(b) Place the synchronizer ring on the gear and align the ring slots with the shifting keys.

(c) Install the needle roller bearing in the 2nd gear.

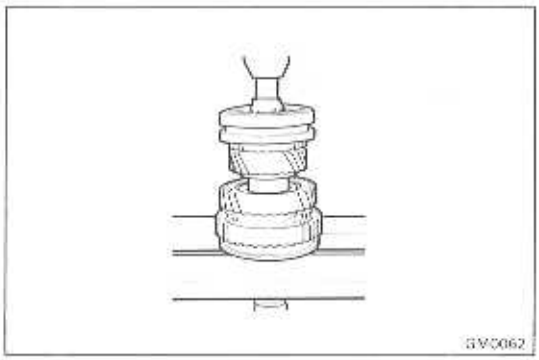

(d) Using a press, install the 2nd gear and hub sleeve No. 1.

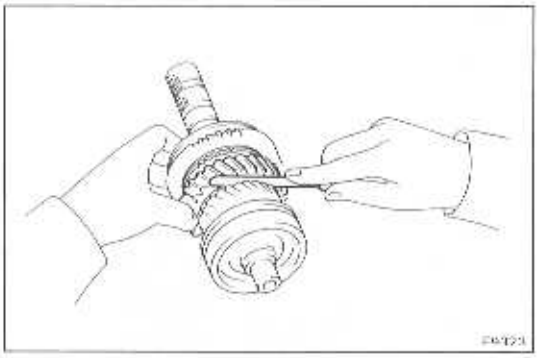

6. **MEASURE SECOND GEAR THRUST CLEARANCE**

Using a feeler gauge, measure the 2nd gear thrust clearance.

Standard clearance:	**0.10 — 0.25 mm (0.0039 — 0.0098 in.)**
Maximum clearance:	**0.25 mm (0.0098 in.)**

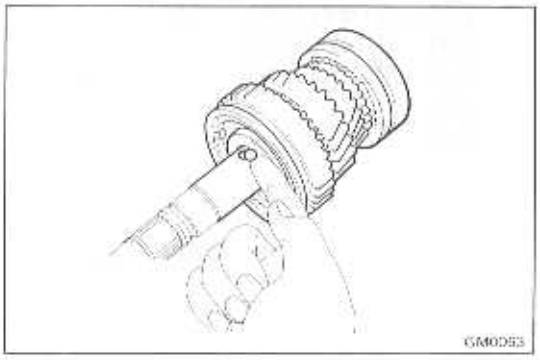

7. **INSTALL LOCKING BALL AND FIRST GEAR ASSEMBLY**

(a) Install the locking ball in the shaft.

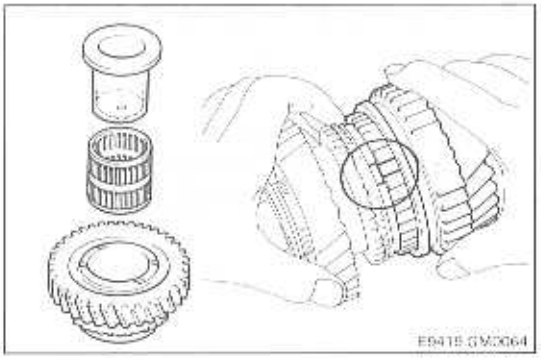

(b) Apply gear oil to the needle roller bearing.

(c) Assemble the gear, synchronizer ring, needle roller bearing and bearing inner race.

(d) Install the assembly on the output shaft with the synchronizer ring slots aligned with the shifting keys.

(e) Turn the inner race to align it with the locking ball.

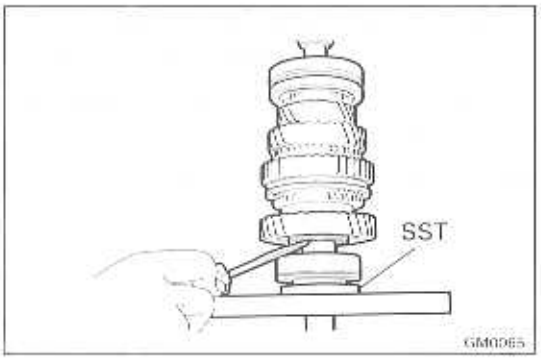

8. INSTALL OUTPUT SHAFT REAR BEARING

Using SST and press, install the bearing on the output shaft with the outer race snap ring groove toward the rear.

HINT: Hold the 1st gear inner race to prevent it from falling.

SST 09506-35010

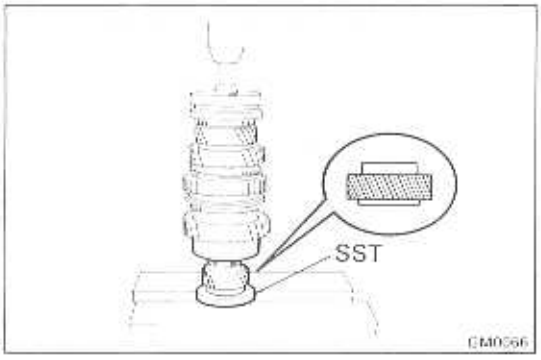

9. (5-Speed) INSTALL FIFTH GEAR

Using SST and a press, install the 5th gear.

SST 09506-35010

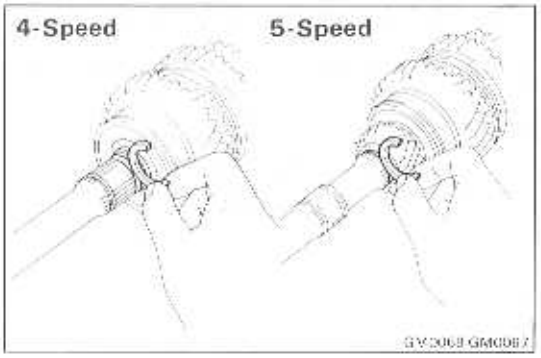

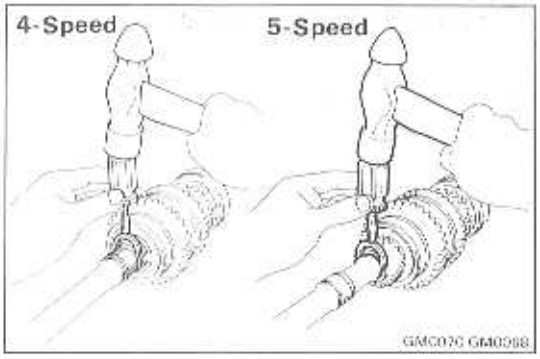

10. INSTALL SNAP RING

(a) Select a snap ring that will allow minimum axial play.

(b) Using a screwdriver and hammer, tap in the snap ring.

Mark	Thickness mm (in.)
A	2.67 — 2.72 (0.1051 — 0.1071)
B	2.73 — 2.78 (0.1075 — 0.1094)
C	2.79 — 2.84 (0.1098 — 0.1118)
D	2.85 — 2.90 (0.1122 — 0.1142)
E	2.91 — 2.96 (0.1146 — 0.1165)
F	2.97 — 3.02 (0.1169 — 0.1189)
G	3.03 — 3.08 (0.1193 — 0.1213)
H	3.09 — 3.14 (0.1217 — 0.1236)
J	3.15 — 3.20 (0.1240 — 0.1260)
K	3.21 — 3.26 (0.1264 — 0.1283)
L	3.27 — 3.32 (0.1287 — 0.1307)

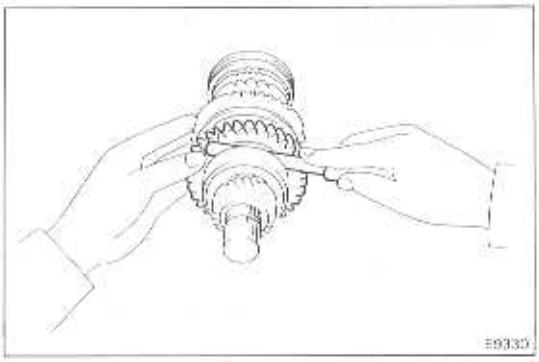

11. MEASURE FIRST GEAR THRUST CLEARANCE

Using a feeler gauge, measure the 1st gear thrust clearance.

Standard clearance:	**0.10 — 0.25 mm (0.0039 — 0.0098 in.)**
Maximum clearance:	**0.25 mm (0.0098 in.)**

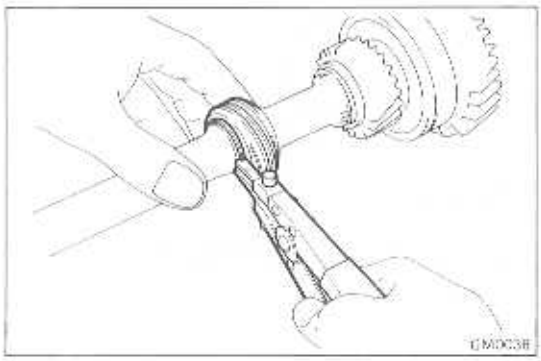

12.-1 (2WD) INSTALL SPEEDOMETER DRIVE GEAR

(a) Using snap ring pliers, install the snap ring.

(b) Install the ball and drive gear.

(c) Using snap ring pliers, install the snap ring.

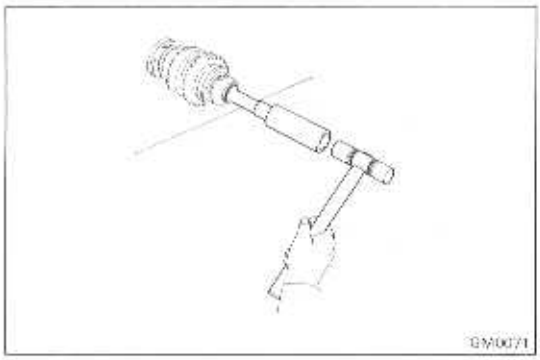

12.-2 (4WD) INSTALL SLEEVE TO OUTPUT SHAFT

Using a plastic hammer, tap the sleeve onto the output shaft.

Counter Gear Assembly and Reverse Idler Gear

CONPONENT

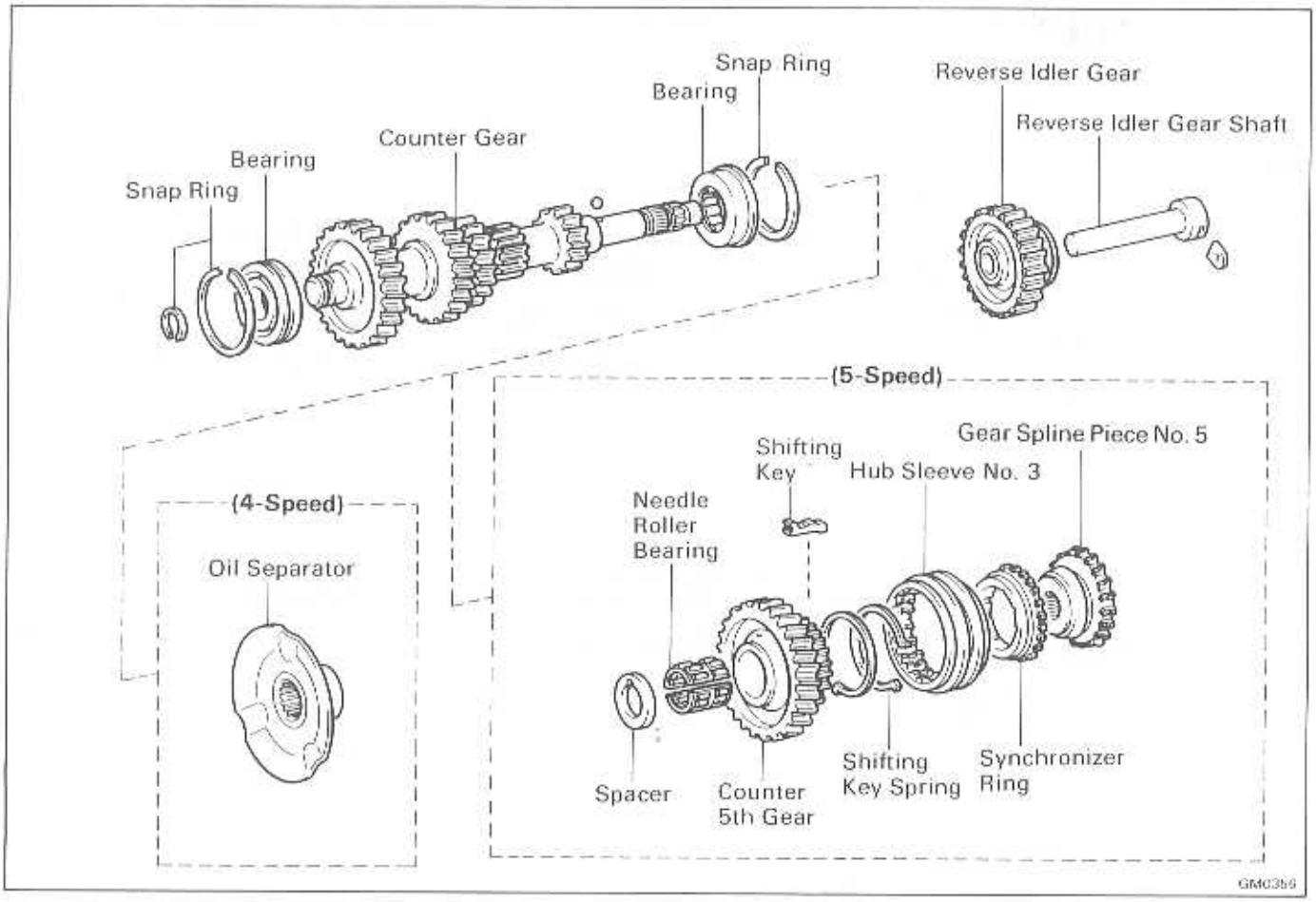

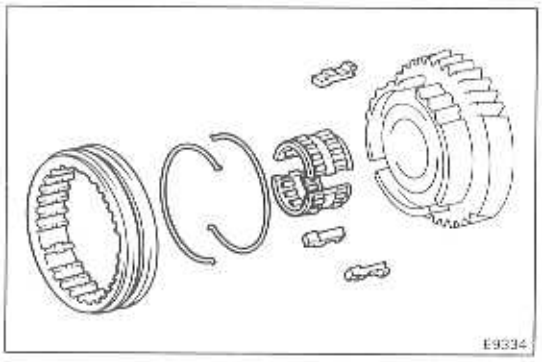

DISASSEMBLY OF COUNTER GEAR ASSEMBLY

REMOVE HUB SLEEVE NO. 3 SHIFTING KEYS AND SPRINGS

Using a screwdriver, remove hub sleeve No. 3, three shifting keys and two springs.

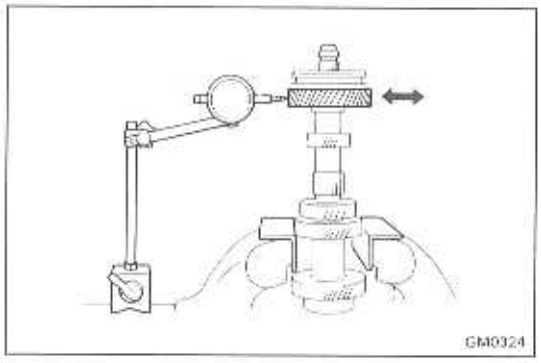

INSPECTION OF COUNTER GEAR ASSEMBLY

1. **MEASURE COUNTER FIFTH GEAR OIL CLERANCE**

   (a) Install spacer, needle roller bearing and counter 5th gear to counter gear.

   (b) Using a dial indicator, measure counter 5th gear oil clarance.

   Standard clearance: 0.009 — 0.032 mm (0.004 — 0.0013 in.)

   Maximum clearance: 0.032 mm (0.0013 in.)

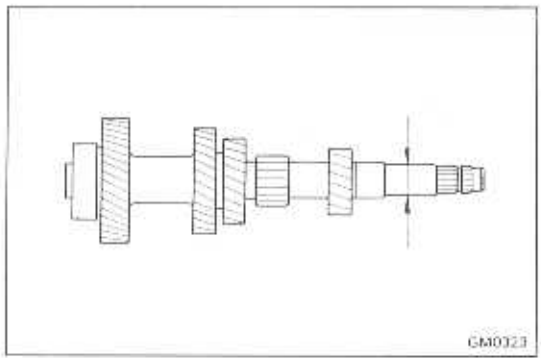

2. (5-Speed)
INSPECT COUNTER GEAR

Using a micrometer, measure the outer diameter of needle roller bearing race.

Standard clearance: 25.98 — 26.00 mm (1.0228 — 1.0236 in.)
Minimum clearance: 25.86 mm (1.0181 in.)

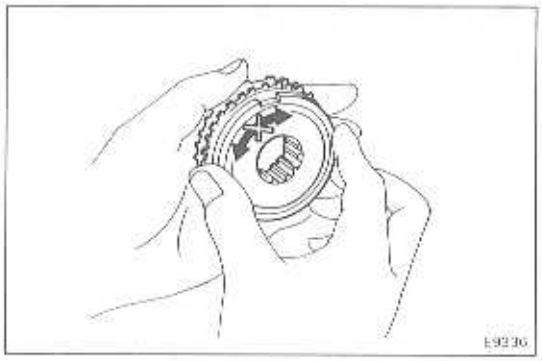

3. **INSPECT SYNCHRONIZER RING**

(a) Turn the ring and push it in to the check the breaking action.

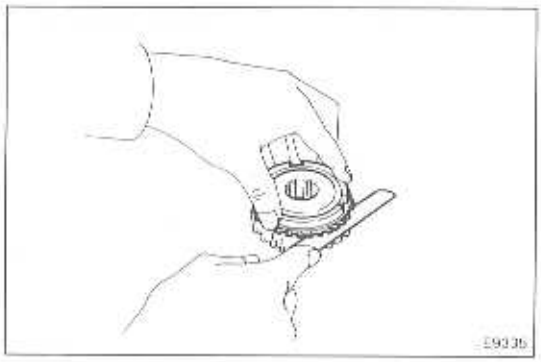

(b) Measure the clearance between the synchronizer ring back and the gear spline end.

Standard clearance: 1.0 — 2.0 mm (0.039 — 0.079 in.)
Minimum clearance: 0.8 mm (0.031 in.)

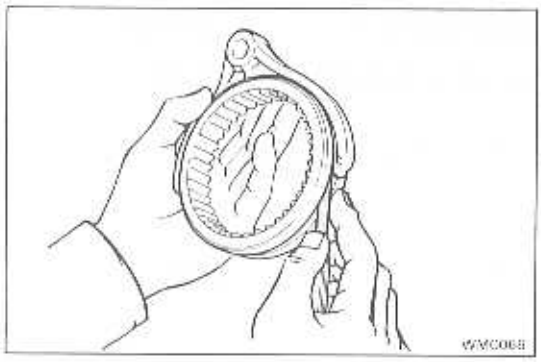

4. **MEASURE CLEARANCE OF SHIFT FORK AND HUB SLEEVE**

Using a feeler gauge, measure the clearance between the hub sleeve and shift fork.

Maximum clearance: 1.0 mm (0.039 in.)

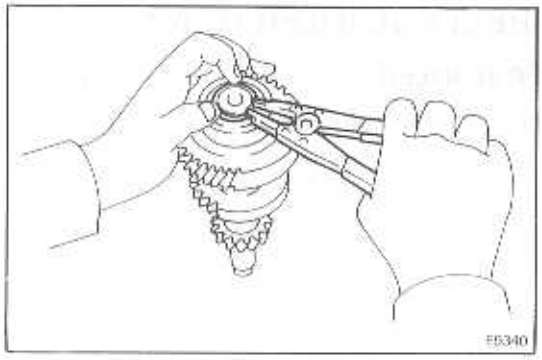

REPLACEMENT OF BEARING

IF NECESSARY, REPLACE COUNTER GEAR FRONT BEARING

(a) Using snap ring pliers, remove the snap ring.

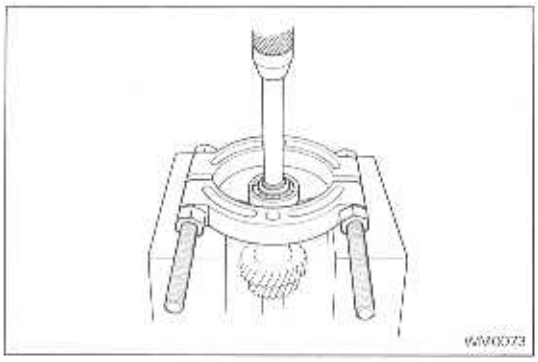

(b) Using SST, press out the bearing.

SST 09950-00020

(c) Replace the side race.

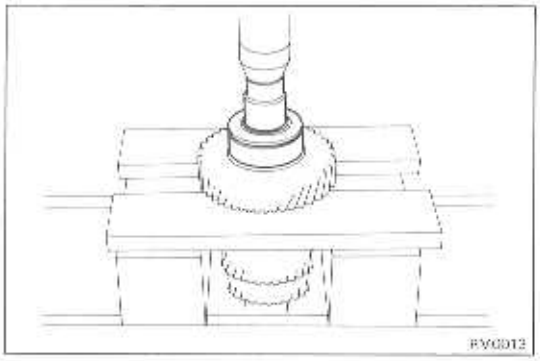

(d) Using a socket wrench, press in the bearing, side race and inner race.

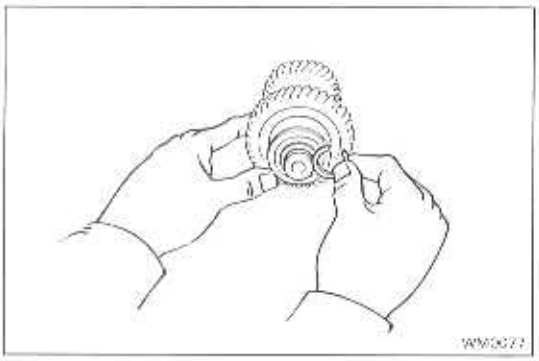

(e) Select a snap ring that will allow minimum axial play and install it on the shaft.

Mark	Thickness mm (in.)
1	2.05 — 2.10 (0.0807 — 0.0827)
2	2.10 — 2.15 (0.0827 — 0.0846)
3	2.15 — 2.20 (0.0846 — 0.0866)
4	2.20 — 2.25 (0.0866 — 0.0886)
5	2.25 — 2.30 (0.0886 — 0.0906)
6	2.30 — 2.35 (0.0906 — 0.0925)

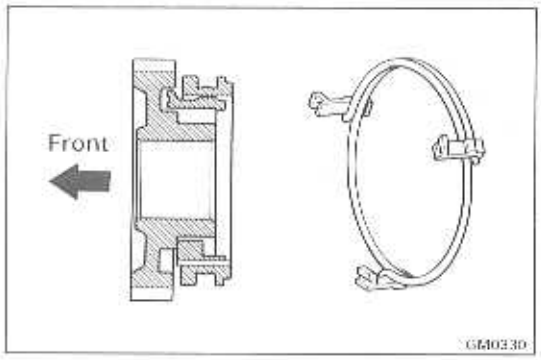

ASSEMBLY OF COUNTER GEAR ASSEMBLY

INSTALL HUB SLEEVE NO. 3, SHIFTING KEYS AND SPRINGS

(a) Install the clutch hub and shifting keys to the hub sleeve.

(b) Install the shifting key springs under the shifting keys.

NOTICE: Install the key springs positioned so that their end gaps are not in line.

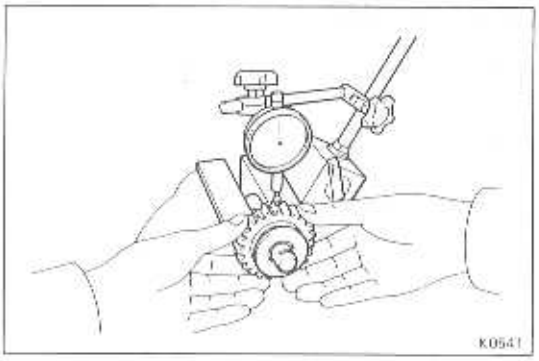

INSPECTION OF REVERSE IDLER GEAR

1. MEASURE REVERSE IDLER GEAR OIL CLEARANCE

Using a dial indicator, measure reverse idler gear oil clearance.

Standard clearace: **0.04 — 0.08 mm (0.0016 — 0.0031 in.)**

Maximum clearance: **0.13 mm (0.0051 in.)**

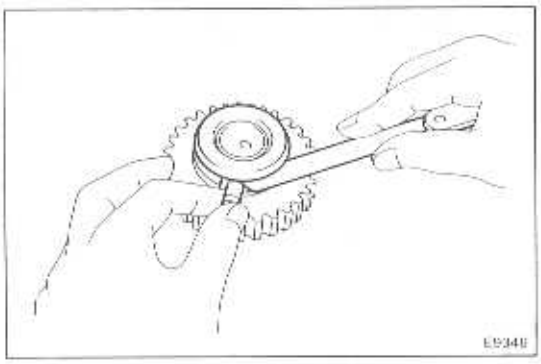

2. **MEASURE CLEARANCE OF REVERSE IDLER GEAR AND SHIFT ARM SHOE**

Using a feeler gauge, measure the clearance between the reverse idler gear and shift arm shoe.

Standard clearance:	**0.05 — 0.27 mm (0.0020 — 0.0106 in.)**
Maximum clearance:	**0.5 mm (0.197 in.)**

SHIFT LEVER SHAFT ASSEMBLY

COMPONENT

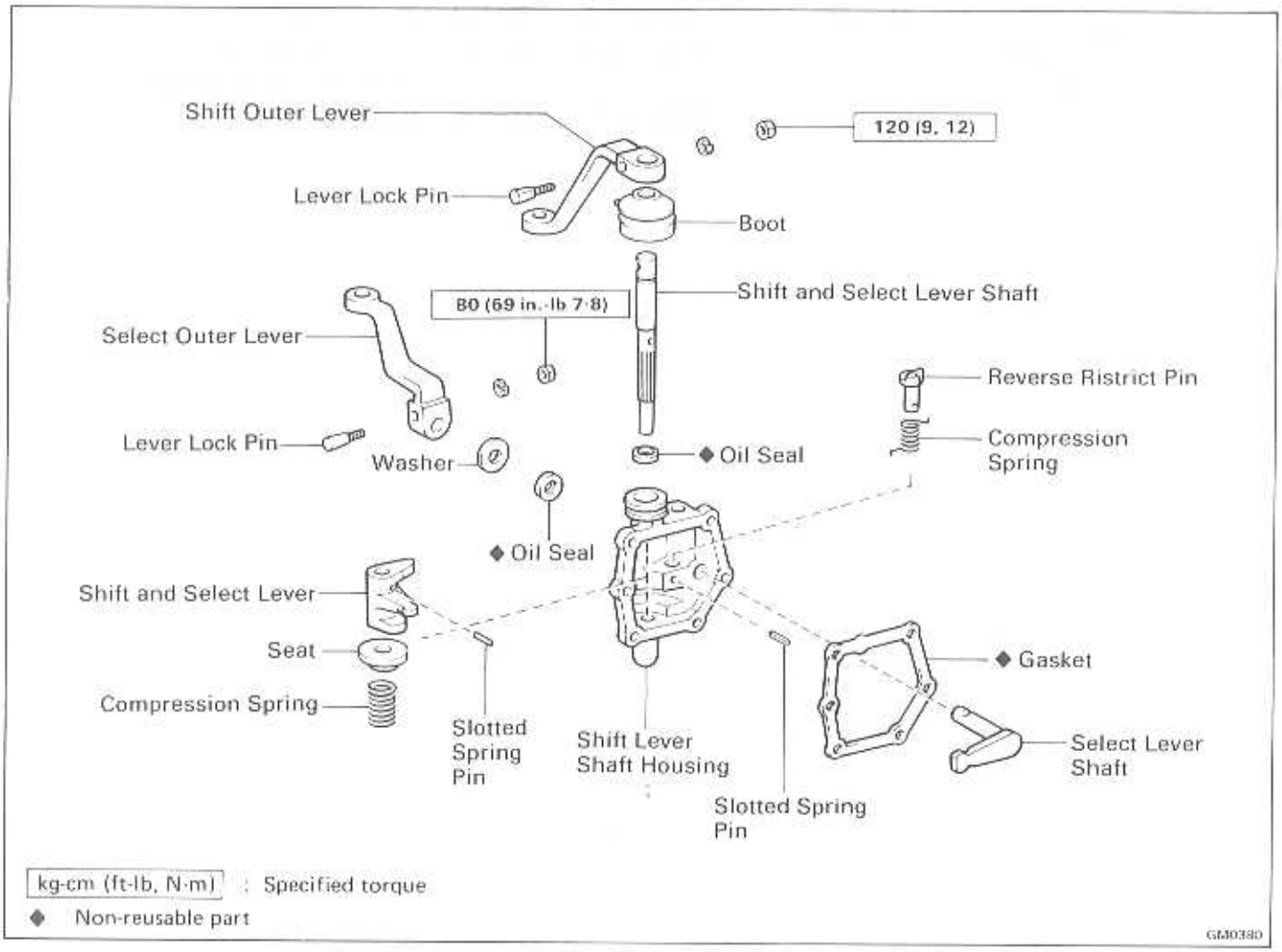

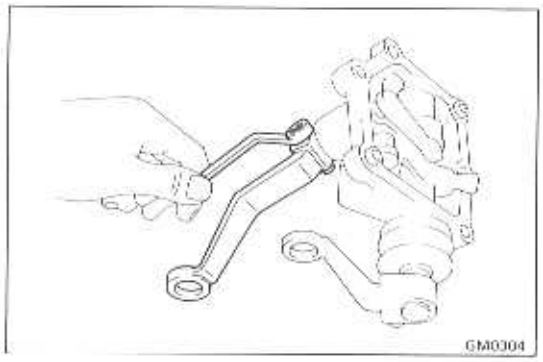

DISASSEMBLY OF SHIFT LEVER SHAFT ASSEMBLY

1. **REMOVE SELECT LEVER**

   (a) Unscrew the nut to the end of pin.

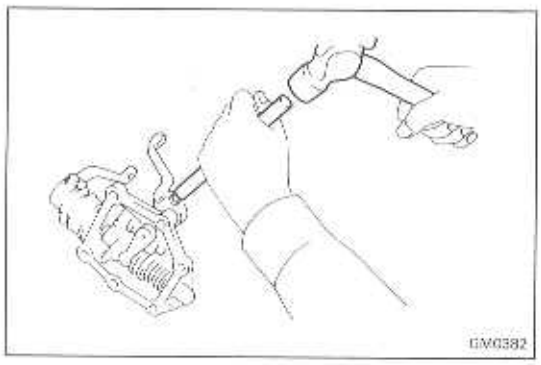

   (b) Tap the pin with a hammer and brass bar until the nut mekes contact with the lever.

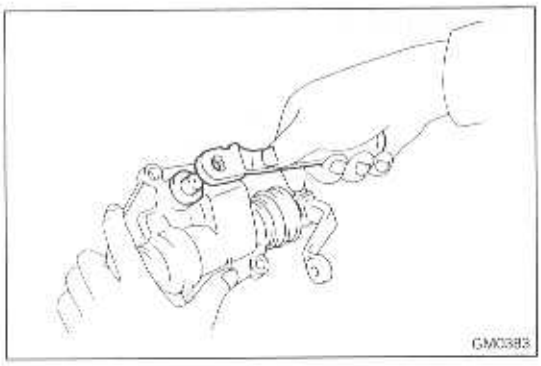

(c) Remove nut, lever lock pin, select outer lever and washer.

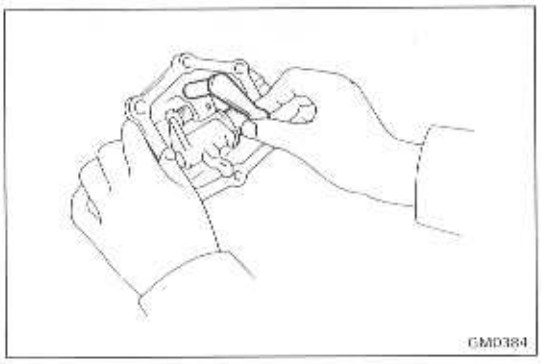

(d) Remove select lever shaft.

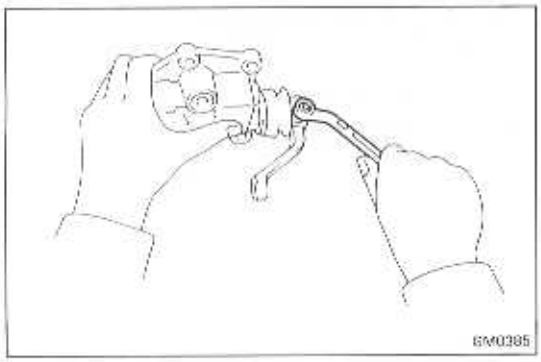

2. **REMOVE SHIFT AND SELECT LEVER SHAFT**

(a) Unscrew the nut to the end of pin.

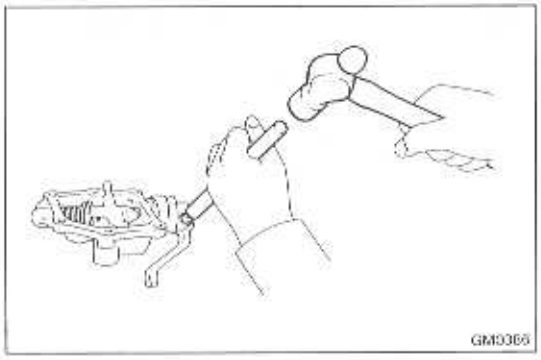

(b) Tap the pin with a hammer and brass bar until the nut mekes contact with the lever.

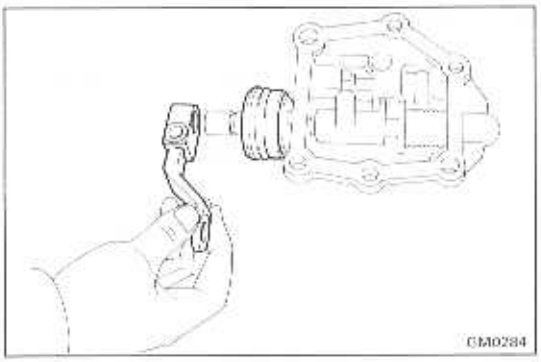

(c) Remove nut, lever lock pin, shift outer lever and boot.

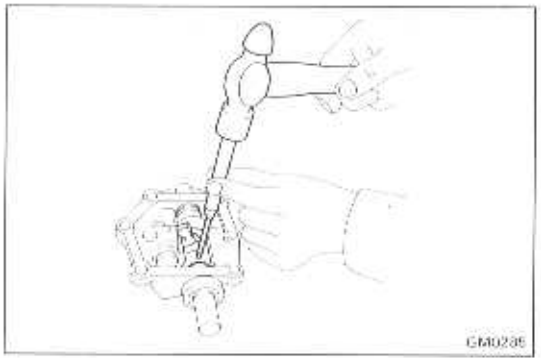

(d) Using a pin punch and a hammer, drive out the slotted spring pin.

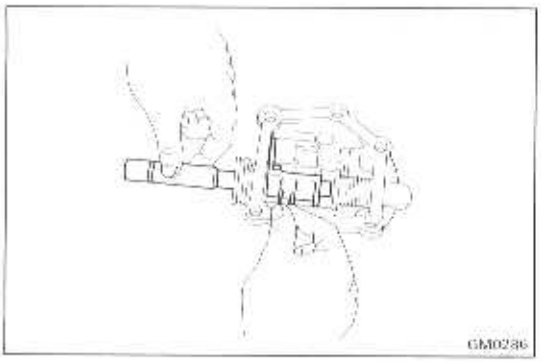

(e) Remove the shift and select lever, shaft, compression spring and seat.

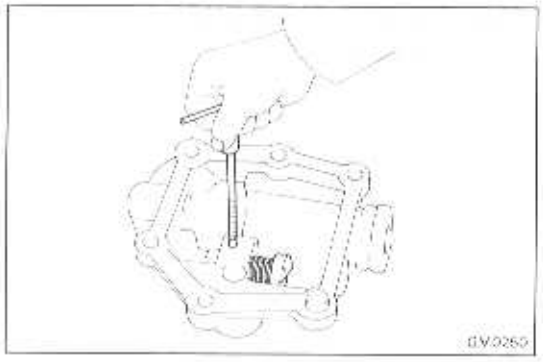

3. **REMOVE REVERSE RESTRICT PIN AND COMPRESSION SPRING**

(a) Using a hammer, drive a screw extractor into the slotted spring pin. Pull out the slotted spring pin.

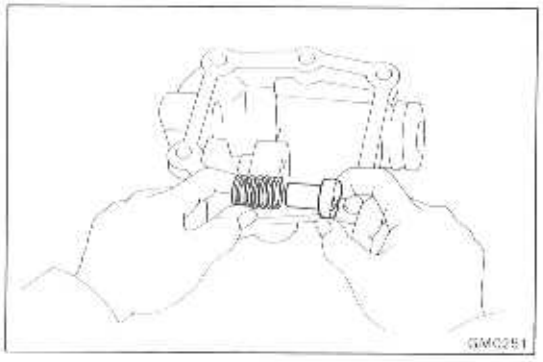

(b) Remove the reverse restrict pin and compression spring.

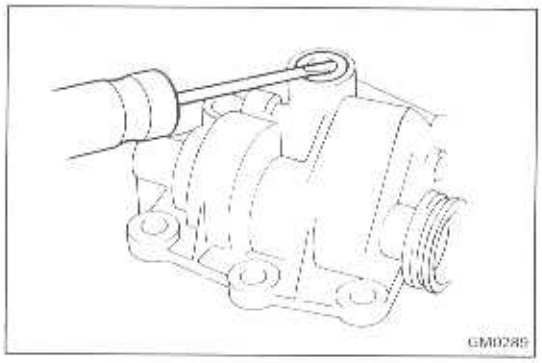

REPLACEMENT OF OIL SEALS

1. **IF NECESSARY, REPLACE SELECT OUTER LEVER OIL SEAL**

(a) Using a screwdriver, pry out the oil seal.

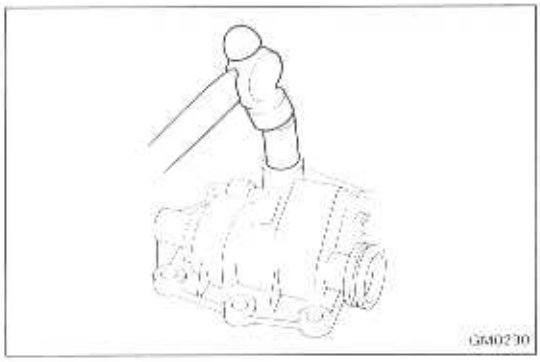

(b) Using a socket wrench and hammer, drive in a new oil seal.

(c) Coat the lip of the oil seal with MP grease.

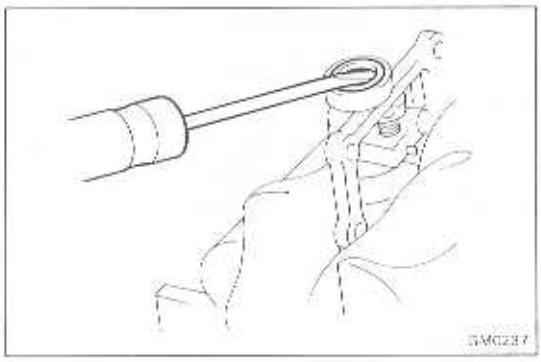

2. **IF NECESSARY, REPLACE SHIFT OUTER LEVER OIL SEAL**

(a) Using a screwdriver, pry out the oil seal.

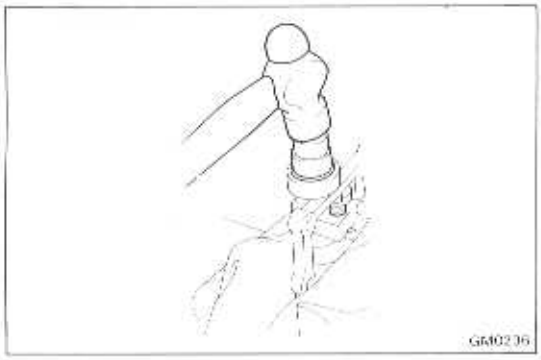

(b) Using a socket wrench and hammer, drive in a new oil seal.

(c) Coat the lip of the oil seal with MP grease.

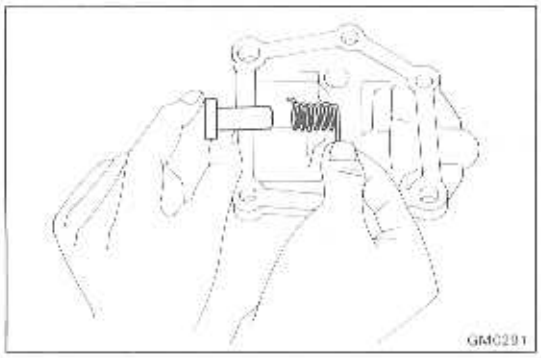

ASSEMBLY OF SHAFT LEVER SHAFT ASSEMBLY

1. **INSTALL REVERSE RESTRICT PIN AND COMPRESSION SPRING**

(a) Install the reverse restrict pin and compression spring.

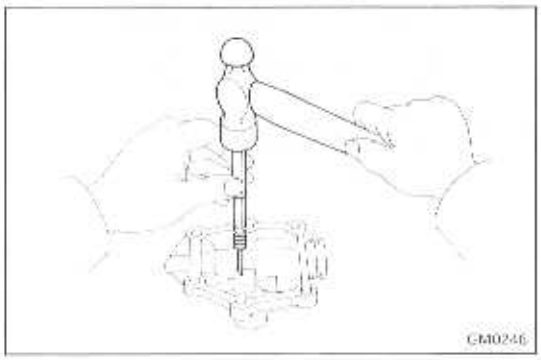

(b) Using a pin punch and hammer, drive in the slotted spring pin.

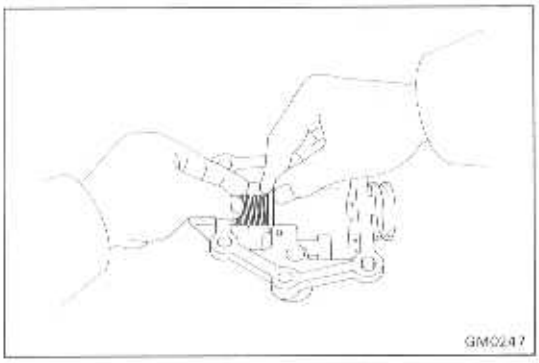

2. INSTALL SEAT AND COMPRESSION SPRING

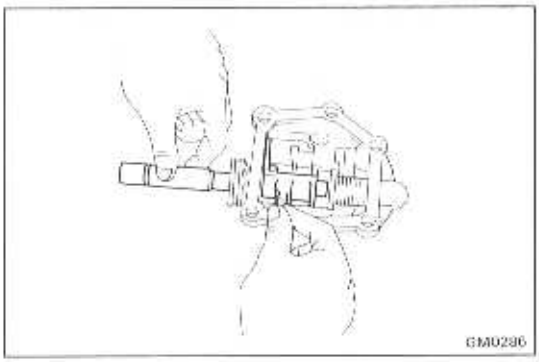

3. INSTALL SHIFT AND SELECT AND SHAFT

(a) Install the shift and select lever and shaft to the shift lever shaft housing.

HINT: One of the spline teeth of the shaft has been eliminated. Therefore, be certain to correctly align this portion to the matching portion on the lever during assembly.

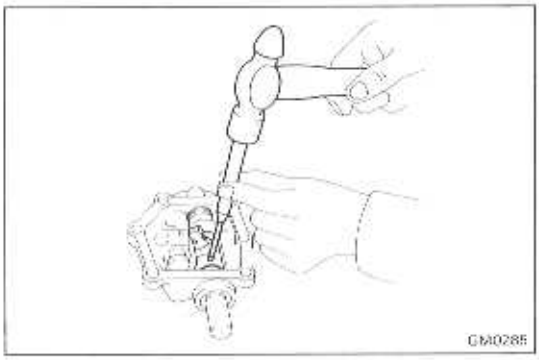

(b) Using a pin punch and hammer, drive in the slotted spring pin.

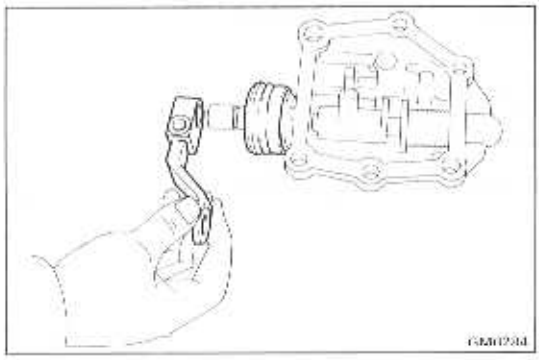

4. INSTALL SHIFT OUTER LEVER AND BOOT

Install the shift outer lever and boot to the shaft with the lever lock pin and nut. Torque the nut.

Torque: 120 kg-cm (9 ft-lb, 12 N·m)

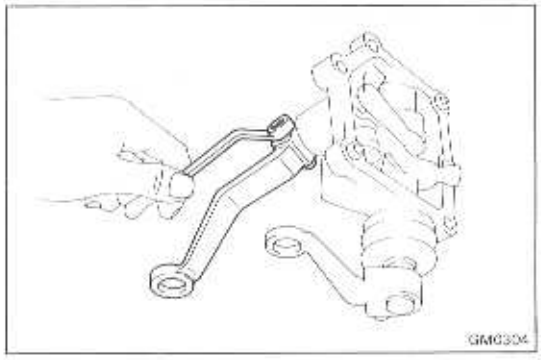

5. INSTALL SELECT OUTER LEVER AND LEVER SHAFT

Install the select outer lever, plate washer and lever shaft with the lever lock pin anbd nut. Torque the nut.

Torque: 80 kg-cm (69 in.-lb, 7.8 N·m)

Front Bearing Retainer

COMPONENT

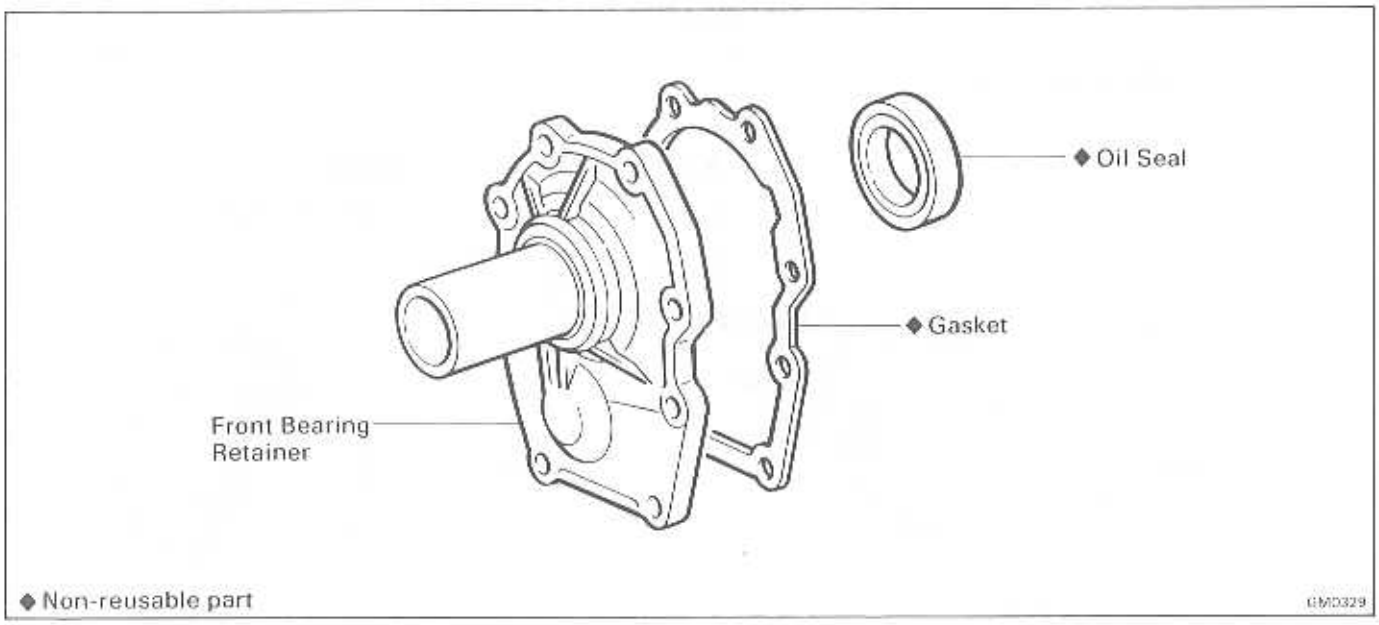

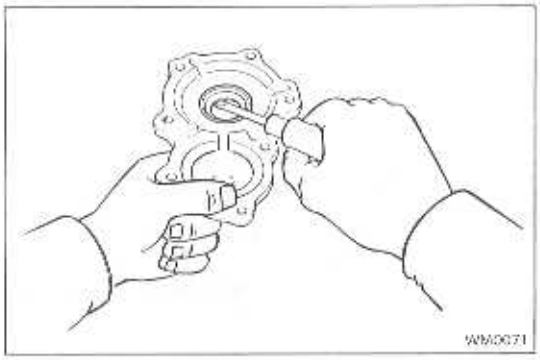

REPLACEMENT OF OIL SEAL

IF NECESSARY, REPLACE FRONT BEARING RETAINER OIL SEAL

(a) Using a screwdriver, pry out the oil seal.

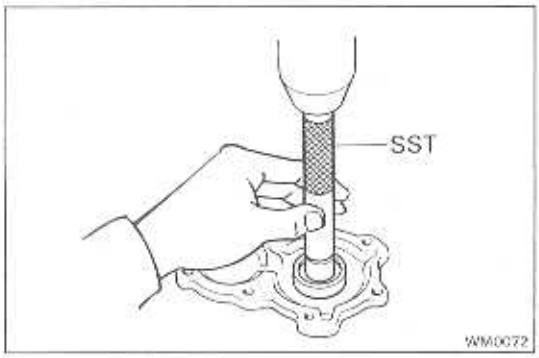

(b) Using SST, press in a new oil seal.

SST 09223-50010

Oil seal depth: 12.2 — 13.2 mm (0.480 — 0.520 in.)
Transmission case installation surface

Extension Housing and Transfer Adaptor

COMPONENT

[REMOTE CONTROL SHIFT TYPE]

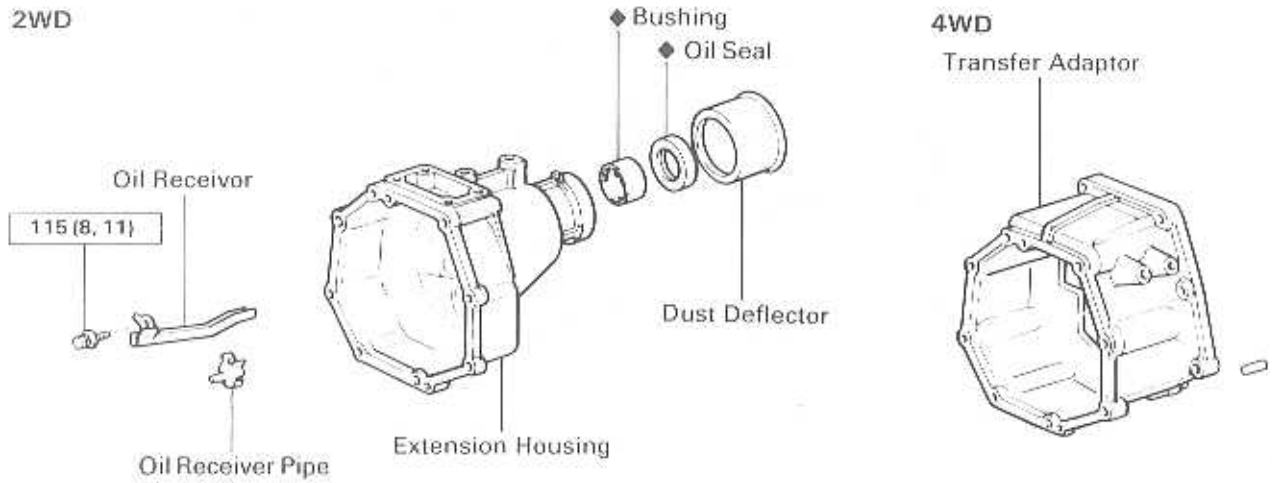

[DIRECT SHIFT TYPE]

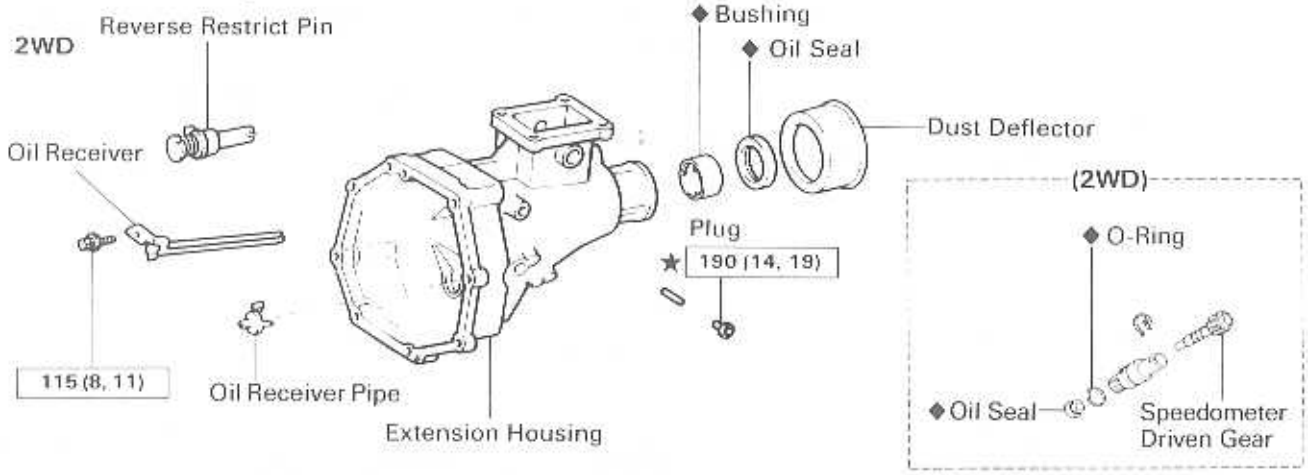

4WD (Hilux Counter Gear Type Transfer)

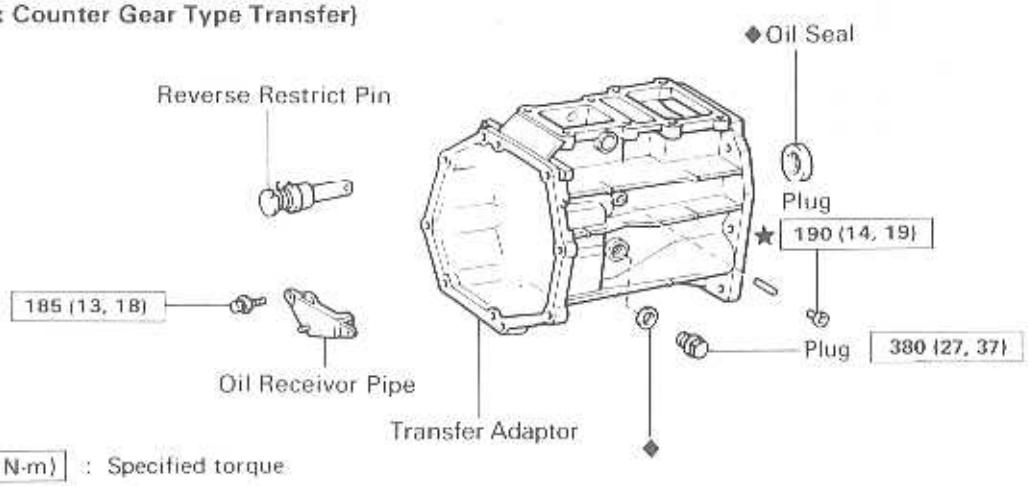

kg-cm (ft-lb, N-m) : Specified torque

◆ Non-reusable part

★ Precoated part

GM0379 GM0328 GM0387 GM0336

COMPONENT (Cont'd)

4WD (Hilux Planetary Gear Type Transfer)

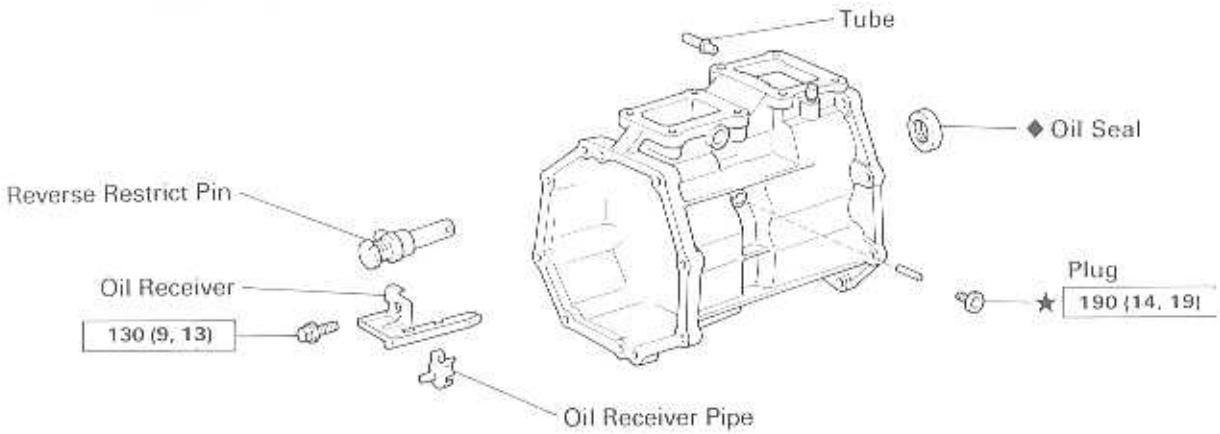

4WD (Land Cruiser)

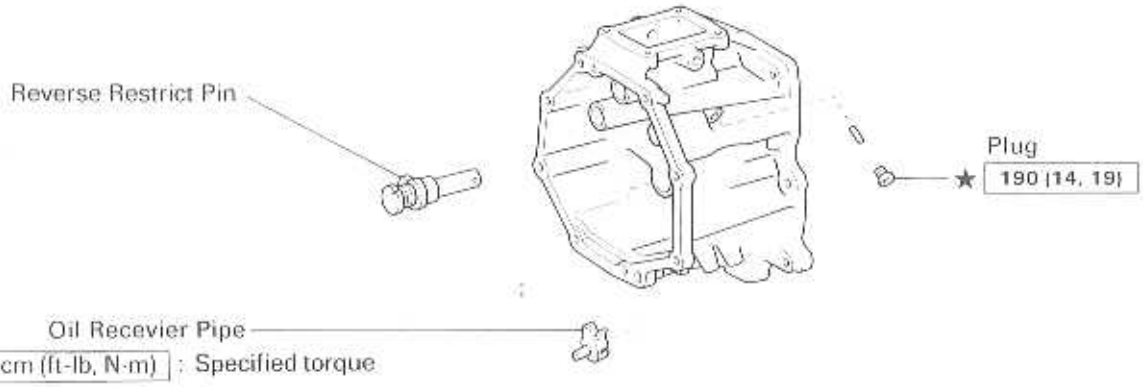

kg-cm (ft-lb, N-m) : Specified torque

◆ Non-reusable part

★ Precoated part

GMC336
GMC375

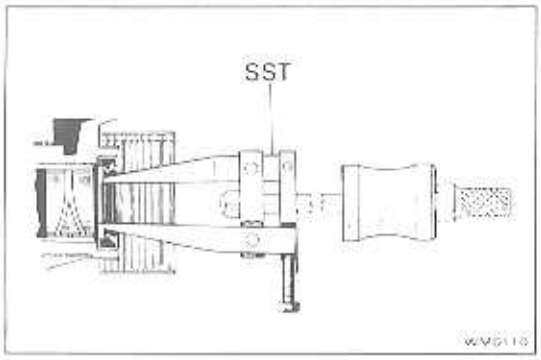

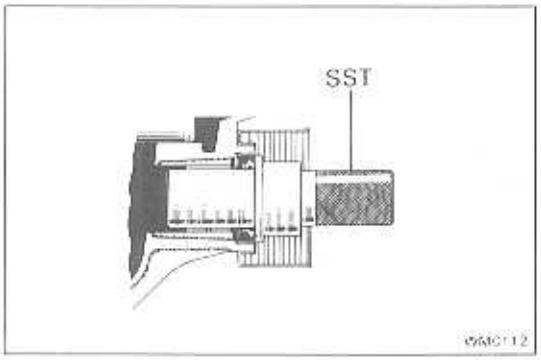

REPLACEMENT OF OIL SEALS

1. **(2WD)**
   IF NECESSARY, REPLACE EXTENTION HOUSING OIL SEAL

   (a) Using SST, remove the oil seal.

   SST 09308-00010 or 09308-10010 with output shaft installed

   (b) Using SST, drive in a new oil seal.

   SST 09325-20010

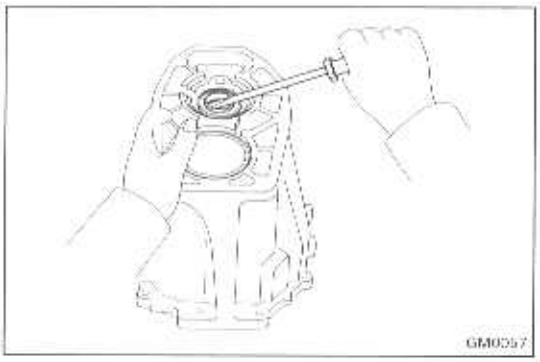

2. (4WD)
IF NECESSARY, REPLACE TRANSFER ADAPTOR OIL SEAL

(a) Using a screwdriver, pry out the oil seal.

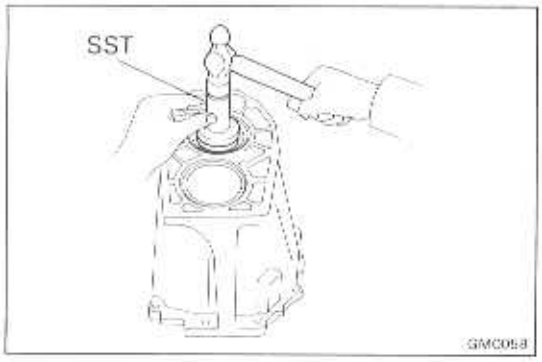

(b) Using SST drive in new oil seal.

SST 09325-12010

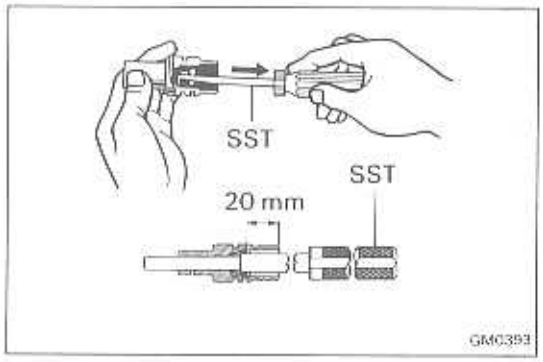

3. (2WD)
IF NECESSARY, REPLACE SPEEDOMETER DRIVEN GEAR OIL SEAL

(a) Using SST, pull out the oil seal.

SST 09921-00010

(b) Using SST, drive the oil seal into the sleeve.

SST 09201-60011

Oil seal depth: 20 mm (0.79 in.)

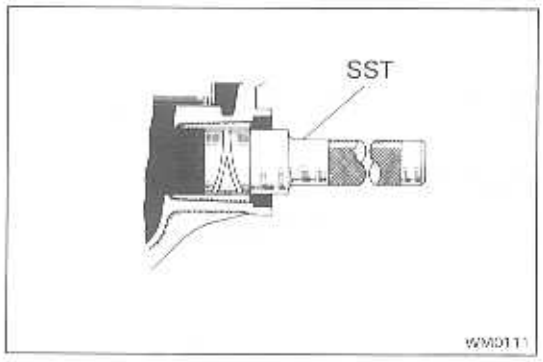

REPLACEMENT OF BUSING

(2WD)
IF NECESSARY, REPLACE BUSHING

(a) Remove the oil seal and dust deflector.

(b) Heat the extension housing end to 80 — 100°C (176 — 212°F) in an oil bath.

(c) Using SST, remove the bushing and install a new bushing.

SST 09307-30010

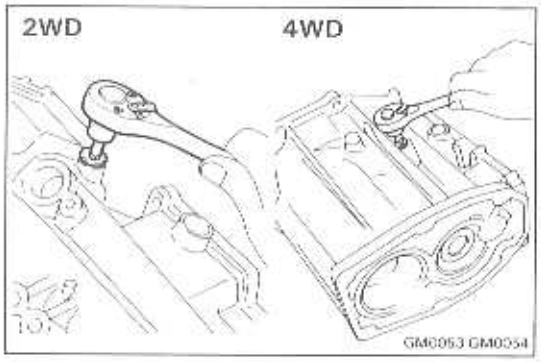

INSPECTION AND REPLACEMENT OF REVERSE RESTRIST PIN

1. **REMOVE THE REVERSE RESTRICT PIN**

(a) Using a torx socket wrench remove the screw plug. (Torx socket wrench T40 09042-00020)

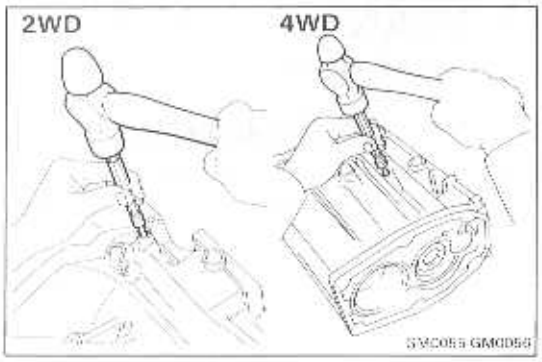

(b) Using a pin punch and hammer, drive out the slotted spring pin.

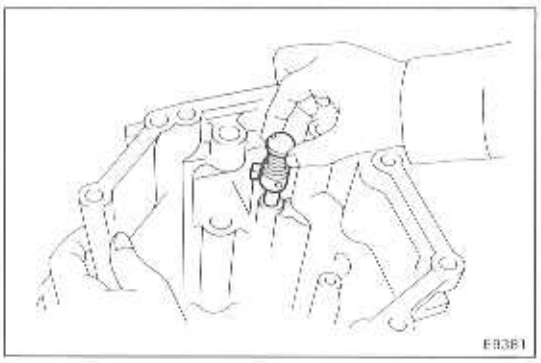

(c) Remove the reverse restrict pin.

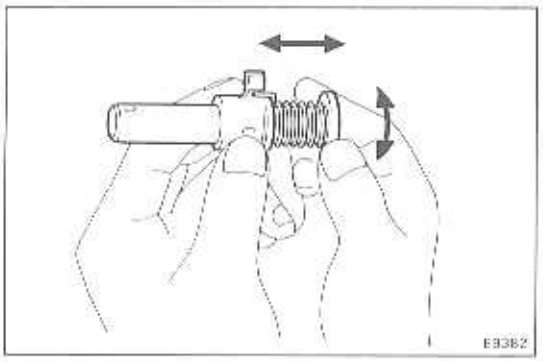

2. INSPECTION OF REVERSE RESTRICT PIN

Turn and push the reverse restrict pin by hand while applying force in axial direction.

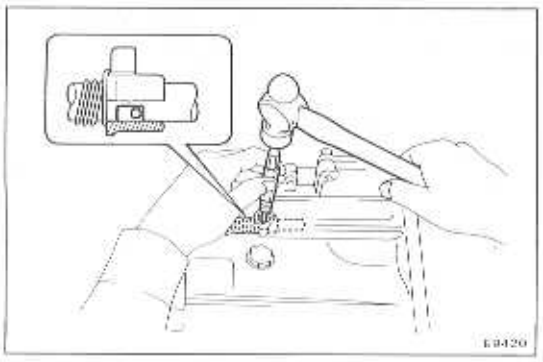

3. INSTALL THE REVERSE RISTRICT PIN

(a) Install the reverse restrict pin to the extention housing or transfer adaptor.

(b) Using pin punch and hammer, drive in the slotted spring pin as shown.

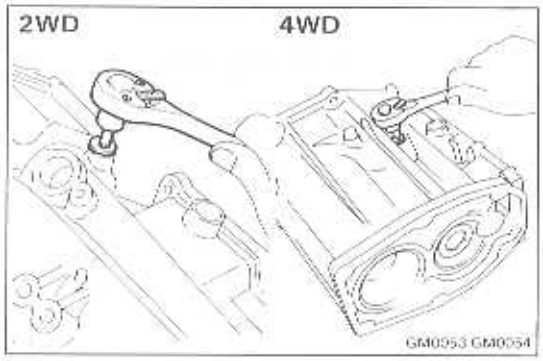

(c) Apply liquid sealer to the plug threads.

Sealant: Part No. 08833-00080, THREEBAND 1344, LOCTITE 242 or equivalent

(d) Using a torx socket wrench, install and torque the screw plug.
(Torx socket wrench T40 09042-00020)

Torque: 190 kg-cm (14 ft-lb, 19 N·m)

ASSEMBLY OF TRANSMISSION (REMOTE CONTROL SHIFT TYPE)

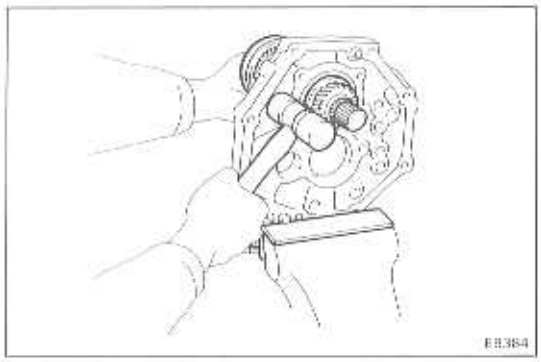

1. INSTALL OUTPUT SHAFT TO INTERMEDIATE PLATE

(a) Install the output shaft into the intermediate plate by pulling on the output shaft and tapping on the intermediate plate.

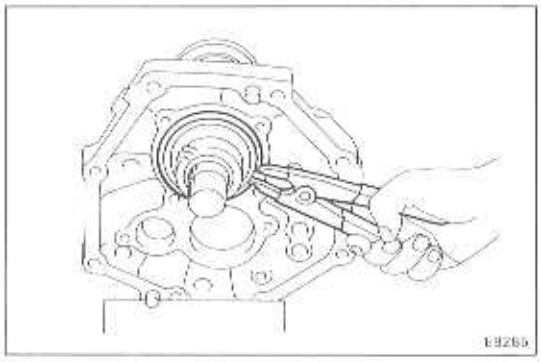

(b) Using a snap ring pliers, install the output shaft center bearing snap ring.

HINT: Be sure the snap ring is flush with the intermidiate plate surface.

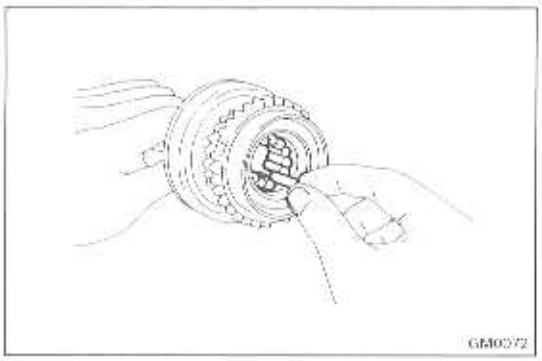

2. INSTALL INPUT SHAFT TO OUTPUT SHAFT

(a) Apply MP grease to the 13 needle roller bearing and install them into the input shaft.

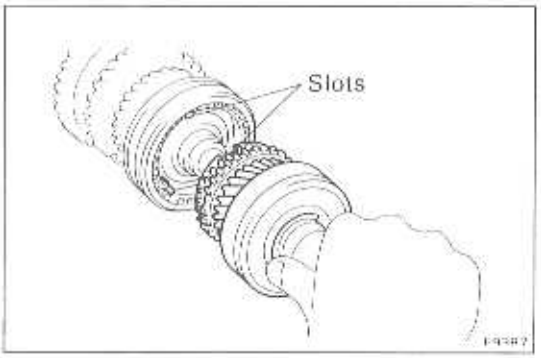

(b) Install the input shaft to the output shaft with the synchronizer ring slots aligned with the shifting keys.

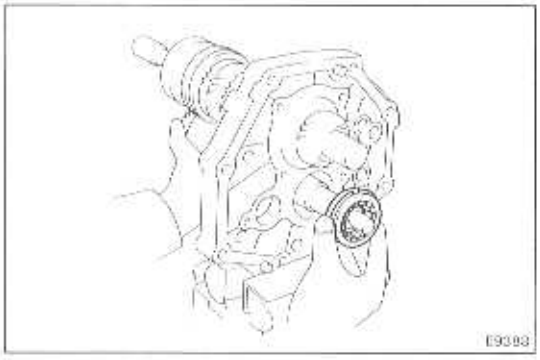

3. INSTALL COUNTER GEAR TO INTERMEDIATE PLATE

(a) Using a snap ring pliers, install snap ring to counter gear rear bearing.

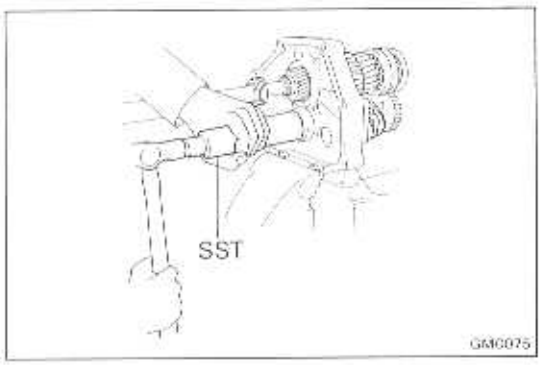

(b) Install the counter gear into the intermediate plate while holding the counter gear and install the counter reak bearing with SST.

SST 09316-60010 (09316-00010)

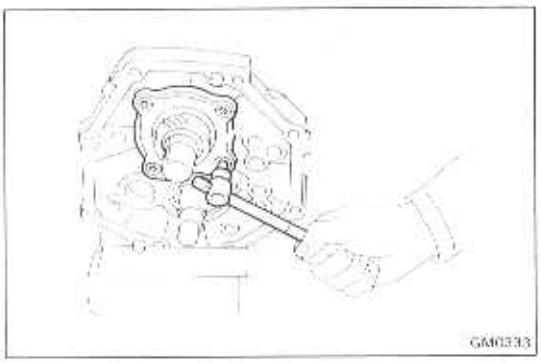

4. **INSTALL REAR BEARING RETAINER**

Using a torx socket wrench, install and torque the screws.

Torque: 185 kg-cm (13 ft-lb, 18 N·m)

(Torx socket wrench T40 09042-00020)

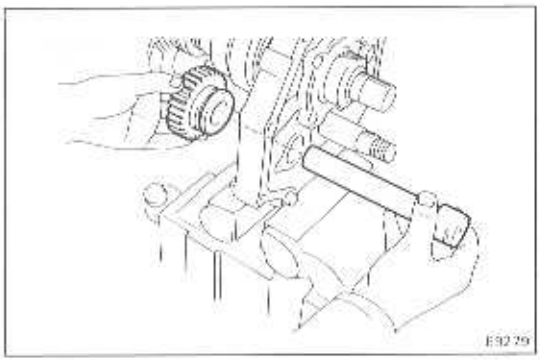

5. **INSTALL REVERSE IDLER GEAR AND SHAFT**

(a) Install reverse idler gear and shaft.

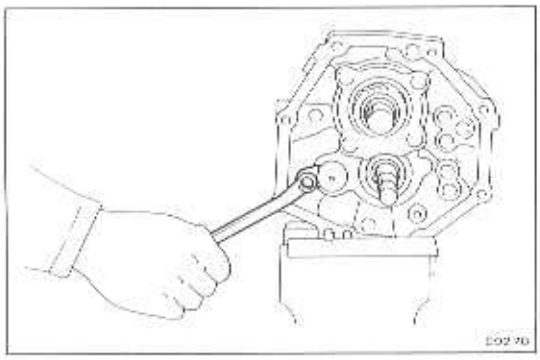

(b) Install shaft stopper and torque the bolt.

Torque: 175 kg-cm (13 ft-lb, 17 N·m)

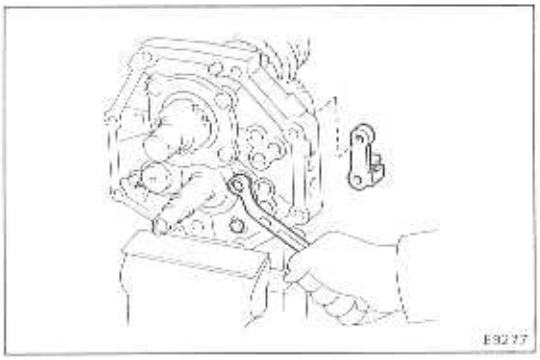

6. **INSTALL REVERSE SHIFT ARM BRACKET**

Install reverse shift arm bracket and torque the two bolts.

Torque: 185 kg-cm (13 ft-lb, 18 N·m)

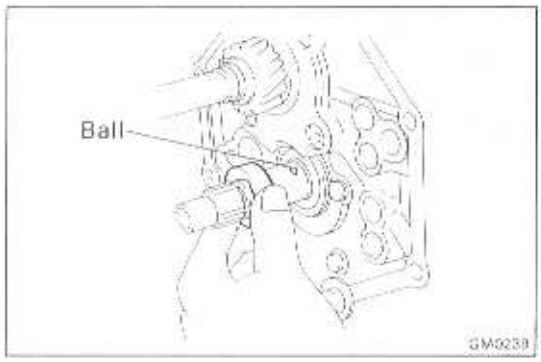

7. (5-Speed)
INSTALL BALL AND SPACER

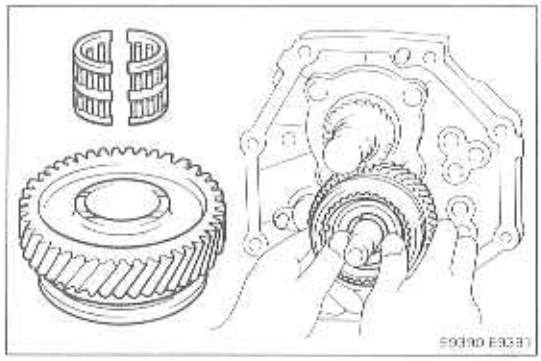

8. (5-Speed)
INSTALL COUNTER FIFTH GEAR WITH HUB SLEEVE NO. 3 ASSEMBLY AND NEEDLE ROLLER BEARINGS

(a) Apply gear oil to the needle roller bearings.

(b) Install the counter 5th gear with hub sleeve No. 3 and needle roller bearings.

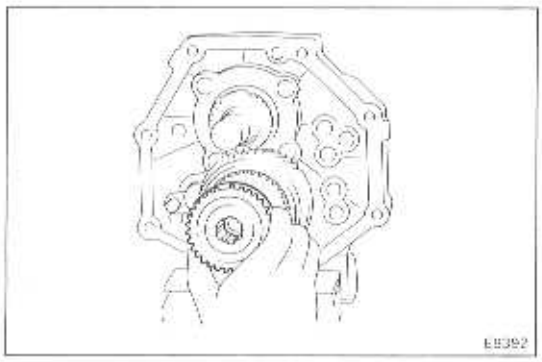

9. (5-Speed)
INSTALL SYNCHRONIZER RING AND GEAR SPLINE PIECE NO. 5

(a) Install the synchronizer ring on gear spline piece No. 5.

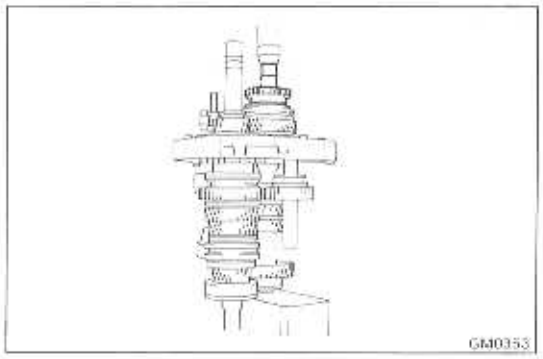

(b) Dismount the intermediate plate from the vise.

(c) Stand the transmission as shown.

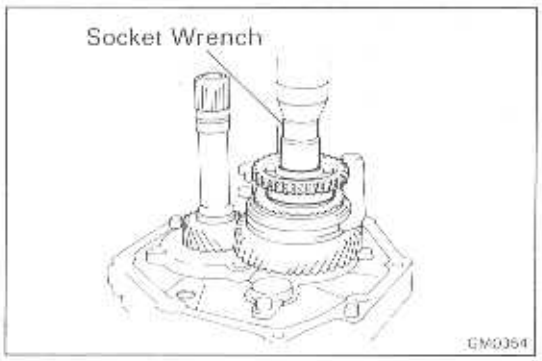

(d) Using a press and 22 mm socket wrench install gear spline piece No. 5 with the synchronizer ring slots aligned with the shifting keys.

(e) Mount the intermediate plate to the vise.

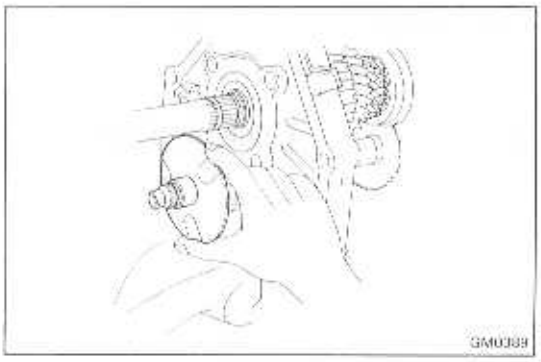

10. (4-Speed)
INSTALL OIL SEPARATOR

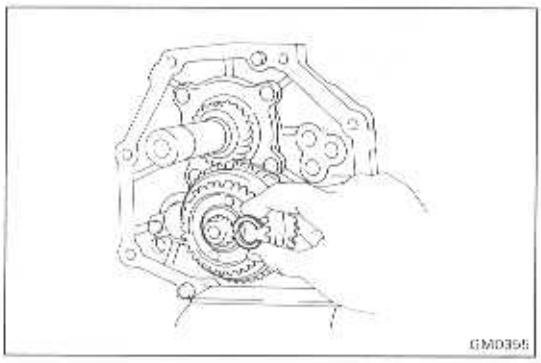

11. **INSTALL SNAP RING**

(a) Select a snap ring that will allow minimum axial play.

Mark	Thickness mm (in.)
A	2.80 — 2.85 (0.110 — 0.112)
B	2.85 — 2.90 (0.112 — 0.114)
C	2.90 — 2.95 (0.114 — 0.116)
D	2.95 — 3.00 (0.116 — 0.118)
E	3.00 — 3.05 (0.118 — 0.120)
F	3.05 — 3.10 (0.120 — 0.122)
G	3.10 — 3.15 (0.122 — 0.124)

(b) Using a brass bar and hammer install the snap ring.

5-Speed

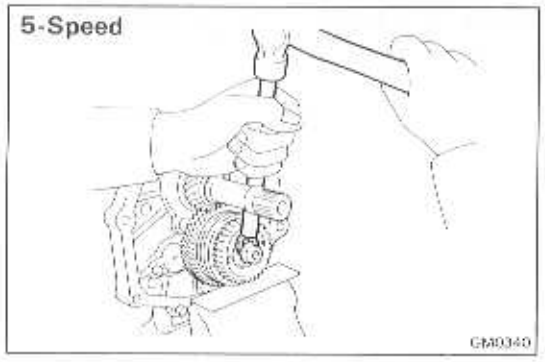

4-Speed

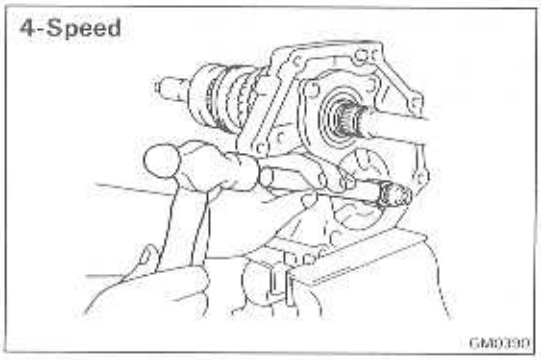

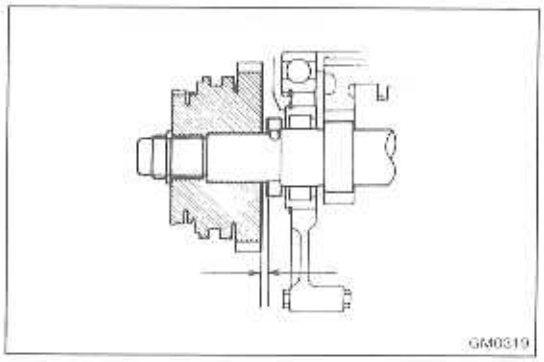

12. (5-Speed)
MEASURE COUNTER FIFTH GEAR THRUST CLEARANCE

Using a feeler gauge, measure the counter 5th gear thrust clearance.

Standard clearance: **0.10 — 0.30 mm (0.0039 — 0.0118 in.)**
Maximum clearance: **0.30 mm (0.0118 in.)**

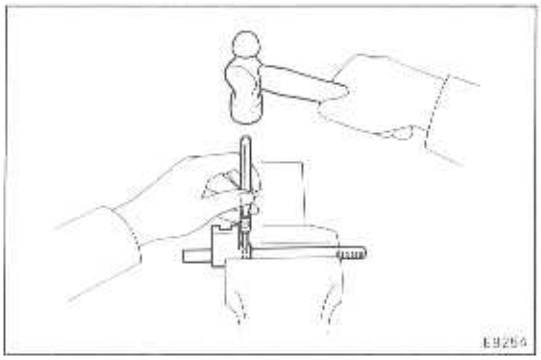

13. INSTALL SHIFT FORK SHAFT NO. 1 AND FORK

(a) Install 1st and 2nd shift head to the shift fork shaft No. 1.

(b) Using a pin punch and hammer, drive in slotted spring pin.

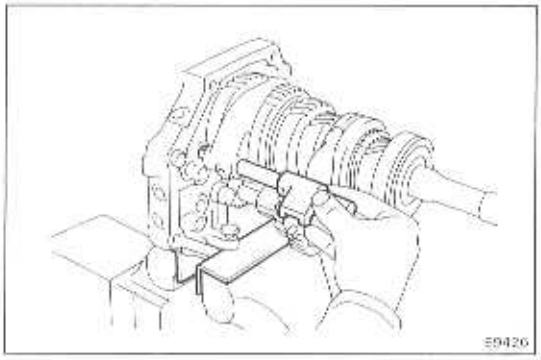

(c) Install shift fork No. 1 and No. 2.

(d) Install shift fork shaft No. 1 through the shift fork No. 1, No. 2 and intermediate plate.

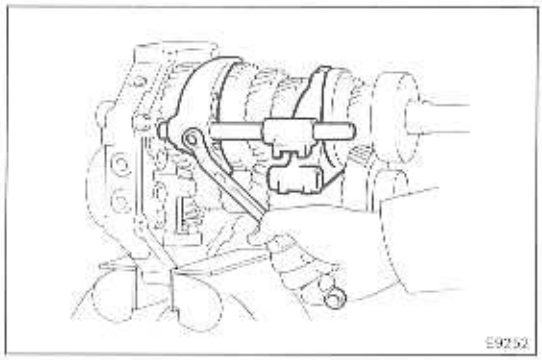

(e) Install shift fork No. 1 set bolt and torque the bolt.

Torque: 200 kg-cm (14 ft-lb, 20 N·m)

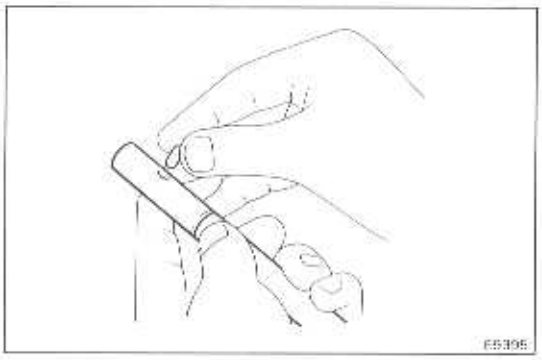

14. INSTALL SHIFT FORK SHAFT NO. 2 AND FORK

(a) Apply MP grease to inter lock pin No. 2 and install them into the shift fork shaft No. 2.

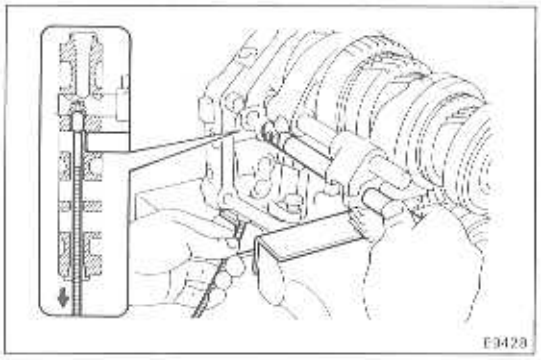

(b) Using a magnetic finger, install interlock pin No. 1 to the intermediate plate.

(c) Install shift fork shaft No. 2 through the shift fork No. 2 and intermediate plate.

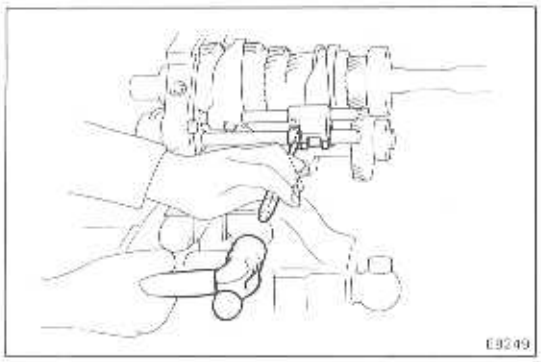

(d) Using a pin punch and hammer, drive in slotted spring pin to the shift fork No. 2.

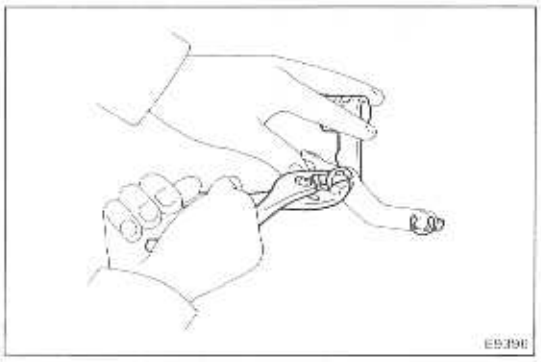

15. INSTALL SHIFT FORK SHAFT NO. 3 AND REVERSE SHIFT FORK AND HEAD

(a) Install shift arm shoe, shift fork and two E-rings to reverse shift arm.

(b) Install reverse shift arm to reverse shift arm bracket.

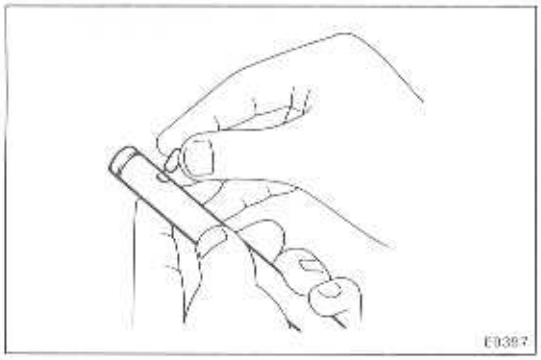

(c) Apply MP grease to interlock pin No. 2 and install them into the shift fork shaft No. 3.

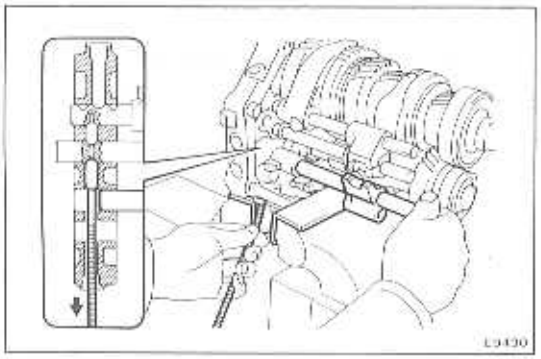

(d) Using magnetic finger, install interlock pin No. 1 to the intermediate plate.

(e) Install shift fork shaft No. 3 through the reverse shift fork, head and intermediate plate.

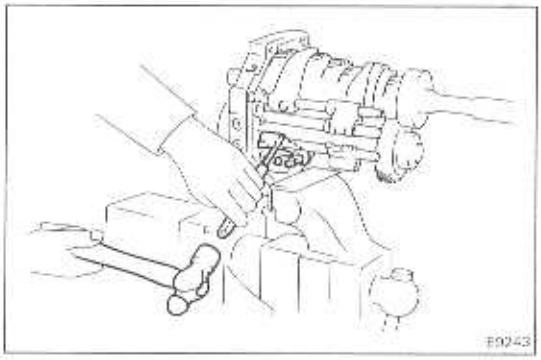

(f) Using a pin punch and hammer, drive in slotted spring pin to the reverse shift fork.

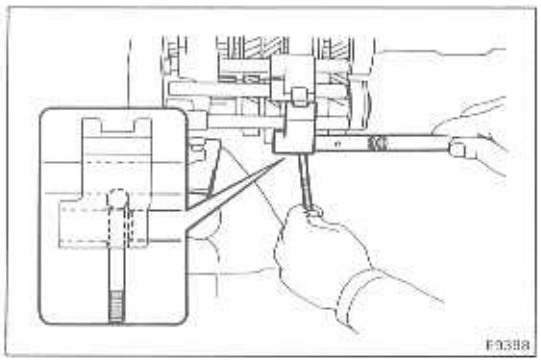

16. (5-Speed)
INSTALL SHIFT FORK SHAFT NO. 4 AND SHIFT FORK NO. 3

(a) Using a magnetic finger, install ball to the reverse shift head.

(b) Install shift fork shaft No. 4 through the reverse shift head.

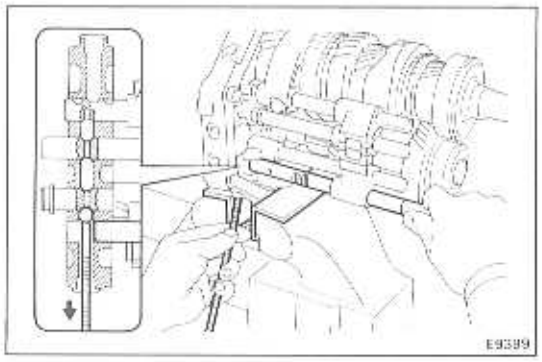

(c) Using a magnetic finger, install interlock ball No. 1 to the intermediate plate.

(d) Install shift fork shaft No. 4 through the shift fork No. 3 and intermediate plate.

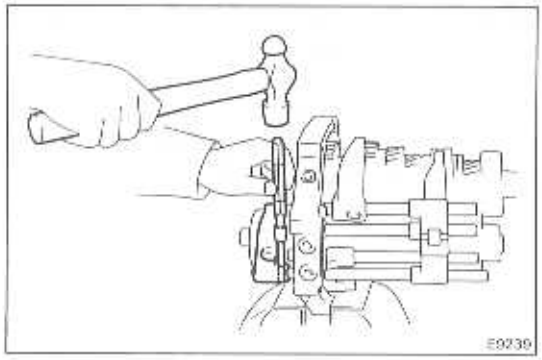

(e) Using a pin punch and hammer, drive in slotted spring pin to shift fork No. 3.

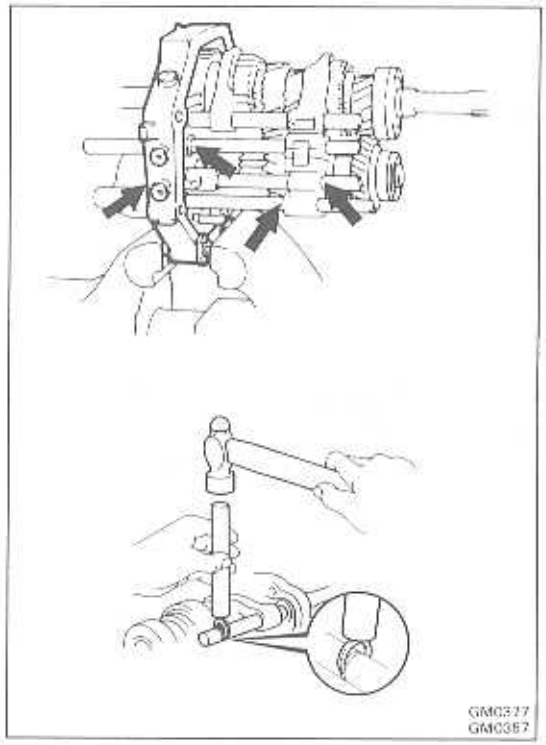

17. INSTALL SHIFT FORK SHAFT SNAP RINGS

Using a brass bar and hammer, drive in snap rings.

5-Speed: Four snap rings
4-Speed: Two snap rings

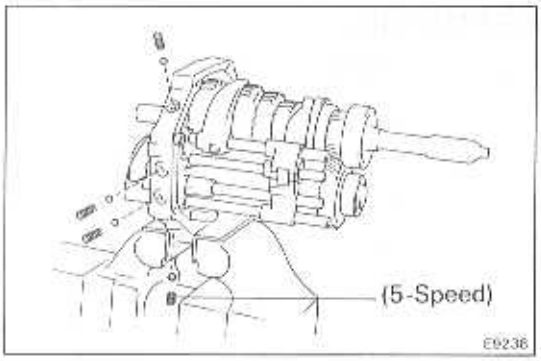

18. INSTALL LOCKING BALLS, SPRINGS AND STRAIGHT SCREW PLUGS

(a) Install locking balls and springs.

5-Speed: Four balls and four springs.
4-Speed: Three balls and three springs.

HINT: Install the short spring into the bottom of the intermediate plate (5-Speed).

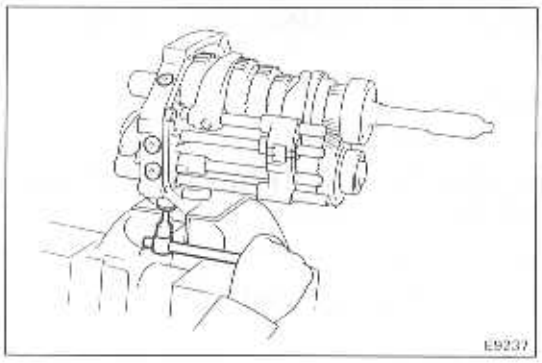

(b) Apply sealant to the plug threads.

Sealant: Part No. 08833-00080, THREE BOND 1344, LOCITITE 242 ro equivalent

(c) Install the locking balls, springs and screw plugs, and then torque the screw plugs with a torx socket wrench.
(Torx socket wrench T40 09042-00020)

Torque: 190 kg-cm (14 ft-lb, 19 N·m)

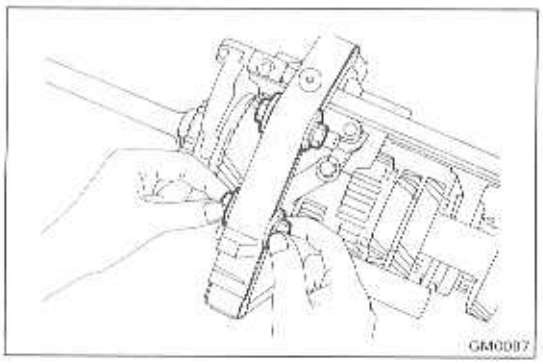

19. DISMOUNT INTERMEDIATE PLATE FROM VISE

(a) Dismount the intermediate plate from the vise.

(b) Remove the bolts, nuts, plate washers.

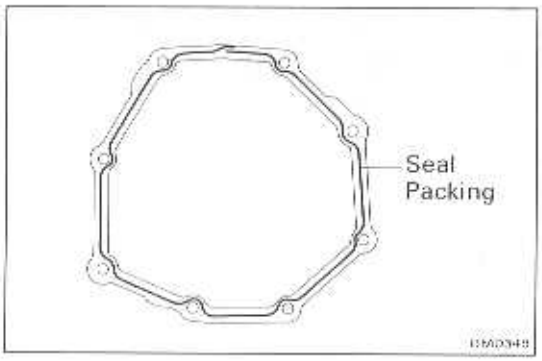

20. INSTALL TRANSMISSION CASE

(a) Apply seal packing to the transmission case as shown.

Seal Packing: Part No. 08833-00090 THREE BOND 1281 or equivalant

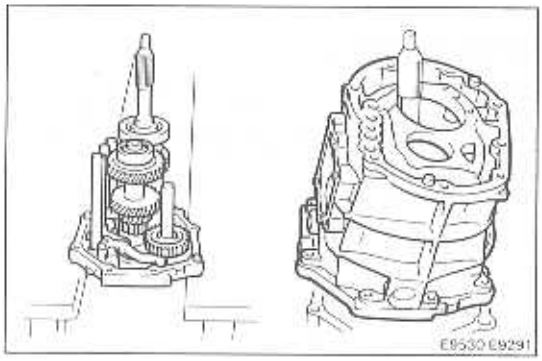

(b) Stand the intermediate plate as shown.

(c) Install transmission case to the intermediate plate as shown.

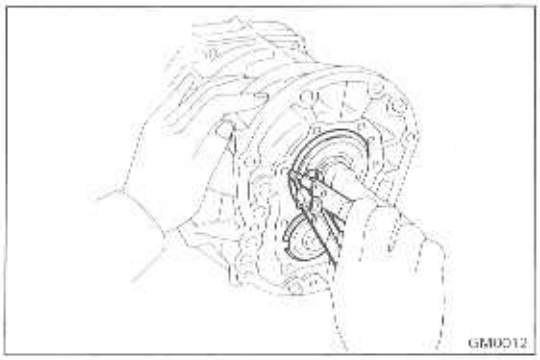

21. INSTALL BEARING SNAP RINGS

Using snap ring pliers, install the two snap rings.

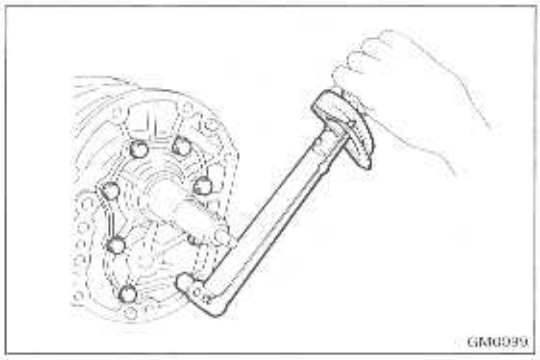

22. INSTALL FRONT BEARING RETAINER WITH NEW GASKET

(a) Install the bearing retainer with a new gasket.

(b) Apply sealant to the bolt threads.

Sealant: Part No. 08833-00080, THREE BOND 1344, LOCTITE 242 or equivalent

(c) Install the torque the bolts.

Torque: 170 kg-cm (12 ft-lb, 17 N·m)

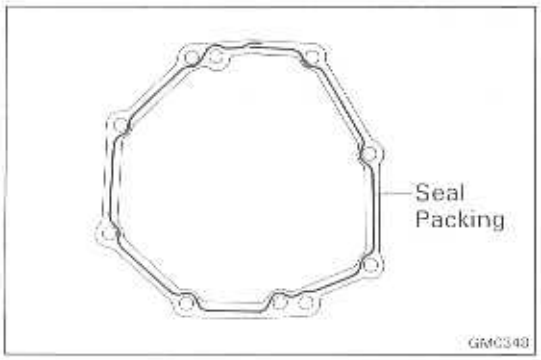

23.-1 (2WD)
INSTALL EXTENSION HOUSING

(a) Apply seal packing to the extension housing as shown.

Seal Packing: Part No. 08826-00090, THREE BOND 1281 or equivalant

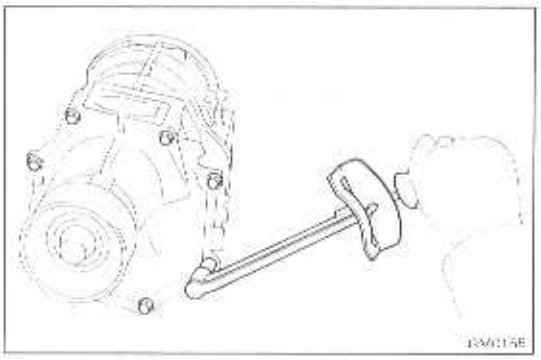

(b) Install athe extension housing and torque the bolts.

Torque: 380 kg-cm (27 ft-lb, 37 N·m)

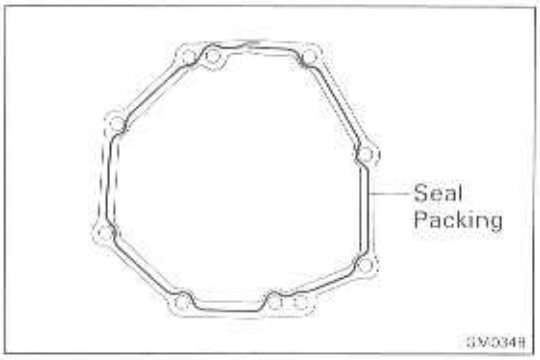

23.-2 (4WD)
INSTALL TRANSFER ADAPTOR

(a) Apply seal packing to the transfer adaptor as shown.

Seal Packing: Part No. 08826-00090, THREE BOND 1281 or equivalant

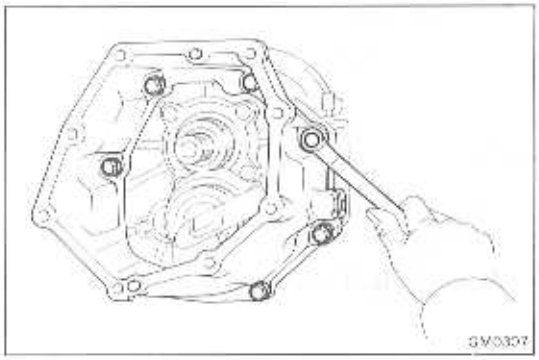

(b) Apply sealant to the three bolt threads of adaptor inner.

Sealant: Part No. 08833-00080, THREE BOND 1344, LOCTITE 242 or equivalent

(c) Install the transfer adaptor and torque the bolts.

Torque: 380 kg-cm (27 ft-lb, 37 N·m)

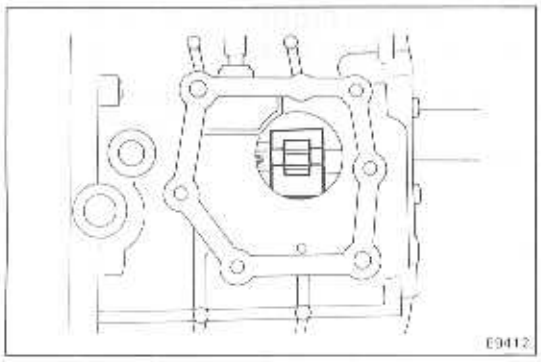

24. INSTALL SHIFT LEVER SHAFT HOUSING ASSEMBLY WITH NEW GASKET

(a) Shift the shift fork No. 2, 1st and 2nd shift head and reverse shift head to the neutral position.

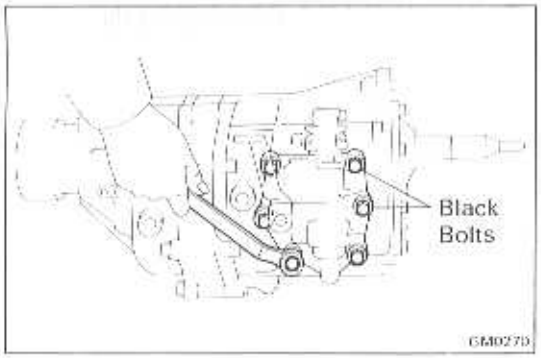

(b) Install a new gasket to the transmission case.

(c) Apply sealant to the threads of all bolts except the two black bolts.

Sealant: Part No. 08833-00080, THREE BOND 1344, LOCTITE 242 or equivalent

(d) Install the shift lever shaft housing and torque the bolts.

Torque: 170 kg-cm (12 ft-lb, 17 N·m)

25. AFTER INSTALLING SHIFT LEVER SHAFT HOUSING, CHECK FOLLOWING ITEMS:

(a) Check to see that the input shaft and output shaft rotate smoothly.

(b) Check to see that shifting can be made smoothly to all positions.

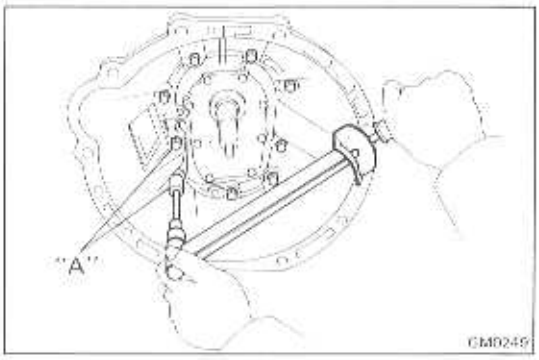

26. INSTALL CLUTCH HOUSING

(a) Install the clutch housing.

(b) Apply liquid sealer to the "A" bolt threads.

Sealant: Part No. 08833-00080, THREE BOND 1344, LOCTITE 242 or equivalent

(c) Install and torque the bolts.

Torque: 380 kg-cm (27 ft-lb, 37 N·m)

27. **INSTALL BACK-UP LIGHT SWITCH**

    Torque: 380 kg-cm (27 ft-lb, 37 N·m)

28. **(2WD)**
    INSTALL SPEEDOMETER DRIVEN GEAR

    (a) Install speedometer driven gear.

    (b) Install lock plate and bolt and torque bolt.

    Torque: 115 kg-cm (8 ft-lb, 11 N·m)

29. **APPLY MOLYBDENUM DISULPHIDE LITHIUM BASE GREASE (NLGI NO. 2) OR MP GREASE**

    Apply molybdenum disulphide lithium base grease to the following parts:

    - Release fork and hub contact point
    - Release fork and push rod contact point
    - Release fork pivot point
    - Clutch disc spline

30. **INSTALL BOOT, FORK, HUB AND BEARING ON TRANSMISSION**

ASSEMBLY OF TRANSMISSION (DIRECT SHIFT TYPE)

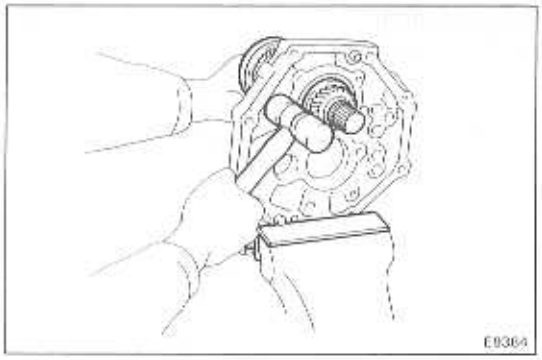

1. INSTALL OUTPUT SHAFT TO INTERMEDIATE PLATE

(a) Install the output shaft into the intermediate plate by pulling on the output shaft and tapping on the intermediate plate.

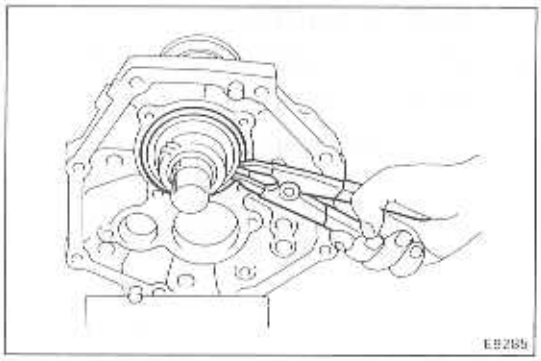

(b) Using a snap ring pliers, install the output shaft center bearing snap ring.

HINT: Be sure the snap ring is flush with the intermediate plate surface.

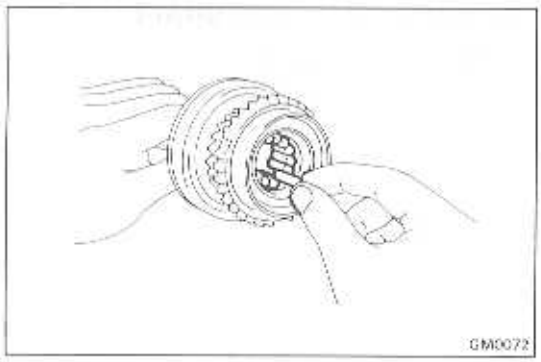

2. INSTALL INPUT SHAFT TO OUTPUT SHAFT

(a) Apply MP grease to the 13 needle roller bearing and install them into the input shaft.

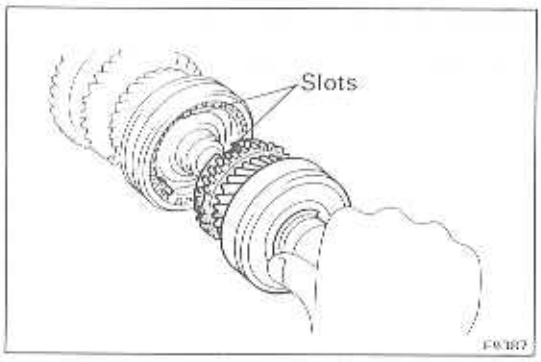

(b) Install the input shaft to the output shaft with the synchronizer ring slots aligned with the shifting keys.

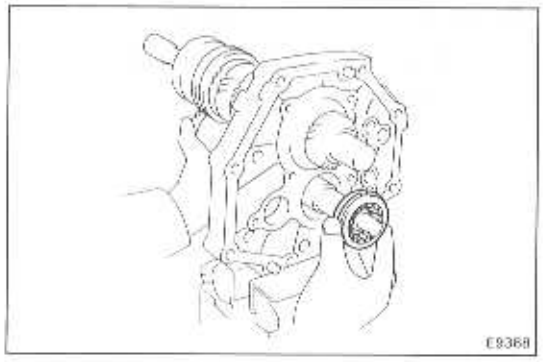

3. INSTALL COUNTER GEAR TO INTERMEDIATE PLATE

(a) Using a snap ring pliers, install snap ring to counter gear rear bearing.

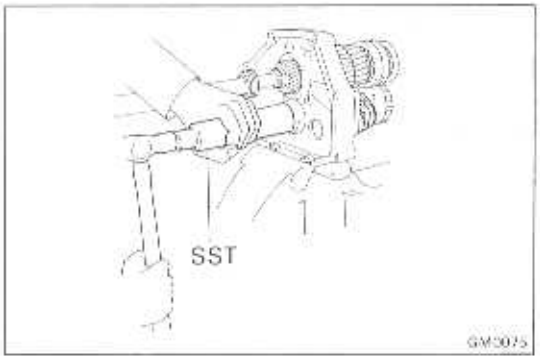

(b) Install the counter gear into the intermediate plate while holding the counter gear and install the counter rear bearing with SST.

SST 09316-60010 (09316-00010)

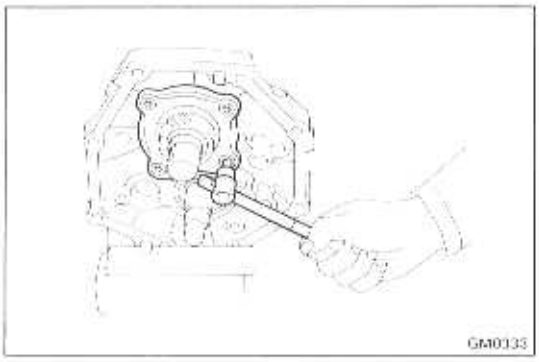

4. INSTALL REAR BEARING RETAINER

Using a torx socket wrench, install the torque the screws.

(Torx socket wrench T40 09042-00020)

Torque: 185 kg-cm (13 ft-lb, 18 N·m)

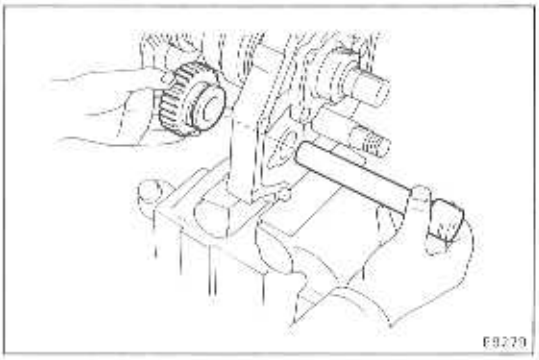

5. INSTALL REVERSE IDLER GEAR AND SHAFT

(a) Install reverse idler gear and shaft.

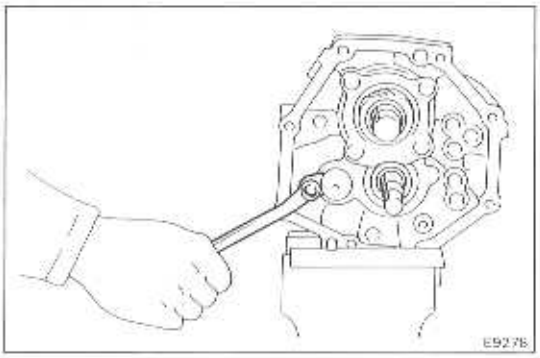

(b) Install shaft stopper and torque the bolt.

Torque: 175 kg-cm (13 ft-lb, 17 N·m)

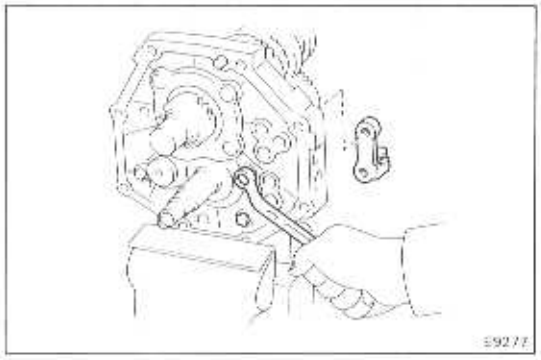

6. INSTALL REVERSE SHIFT ARM BRACKET

Install reverse shift arm bracket and torque the two bolts.

Torque: 185 kg-cm (13 ft-lb, 18 N·m)

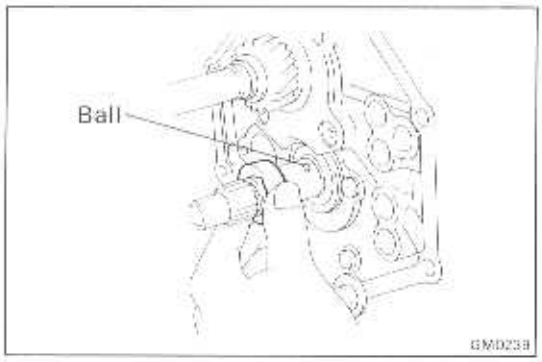

7. **(5-Speed)**
INSTALL BALL AND SPACER

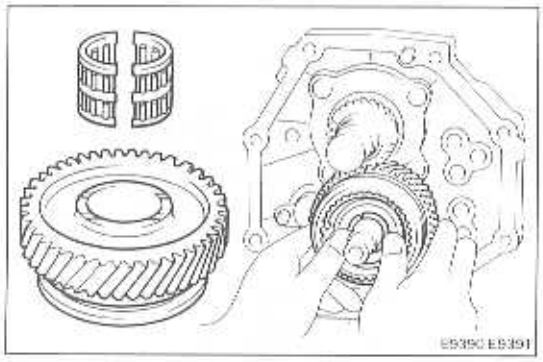

8. **(5-Speed)**
INSTALL COUNTER FIFTH GEAR WITH HUB SLEEVE NO. 3 ASSEMBLY AND NEEDLE ROLLER BEARINGS

(a) Apply gear oil to the needle roller bearings.

(b) Install the counter 5th gear with hub sleeve No. 3 and needle roller bearings.

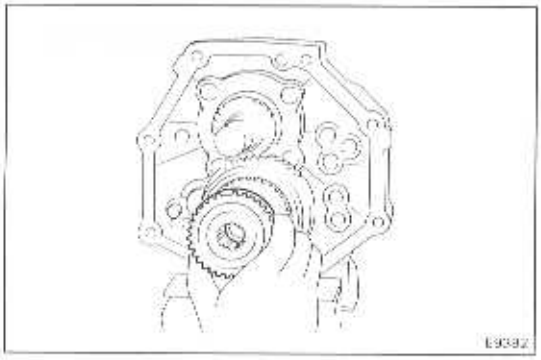

9. **(5-Speed)**
INSTALL SYNCHRONIZER RING AND GEAR SPLINE PIECE NO. 5

(a) Install the synchronizer ring on gear spline piece No. 5.

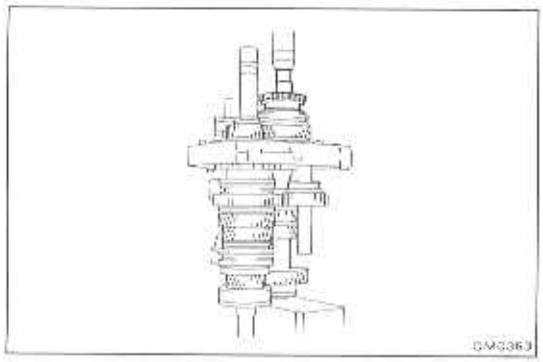

(b) Dismount the intermediate plate from the vise.

(c) Stand the transmission as shown.

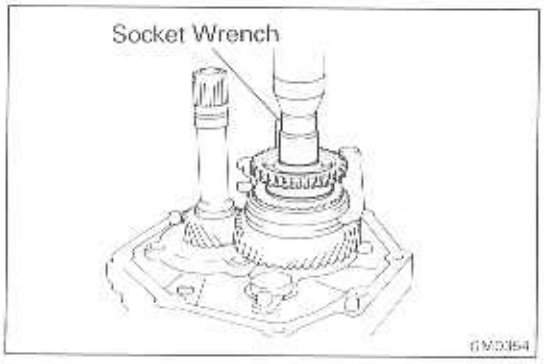

(d) Using a press and 22 mm socket wrench install gear spline piece No. 5 with the synchronizer ring slots aligned with the shifting keys.

(e) Mount the intermediate plate to the vise.

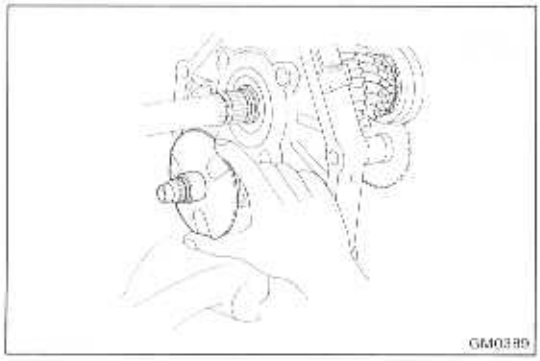

10. (4-Speed)
INSTALL OIL SEPARATOR

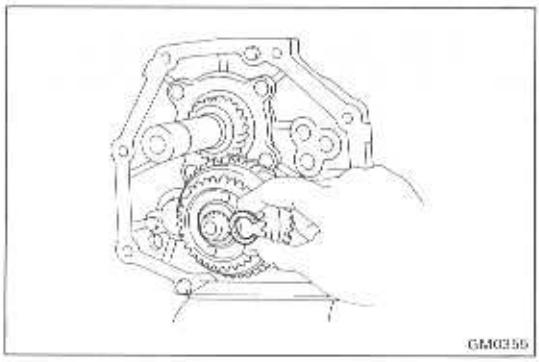

11. **INSTALL SNAP RING**

(a) Select a snap ring that will allow minimum axial play.

Mark	Thickness mm (in.)
A	2.80 — 2.85 (0.110 — 0.112)
B	2.85 — 2.90 (0.112 — 0.114)
C	2.90 — 2.95 (0.114 — 0.116)
D	2.95 — 3.00 (0.116 — 0.118)
E	3.00 — 3.05 (0.118 — 0.120)
F	3.05 — 3.10 (0.120 — 0.122)
G	3.10 — 3.15 (0.122 — 0.124)

(b) Using a brass bar and hammer, install the snap ring.

5-Speed

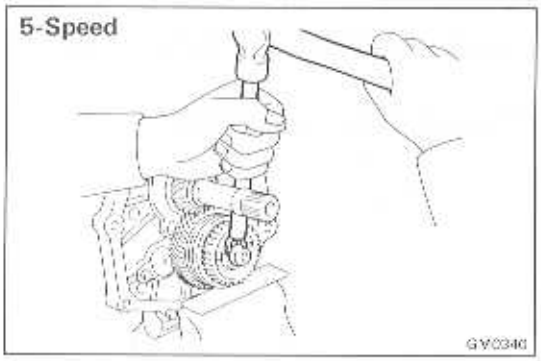

4-Speed

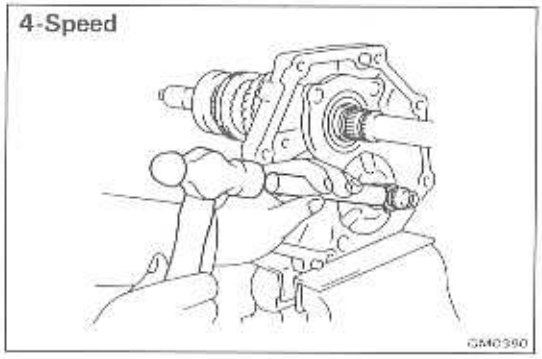

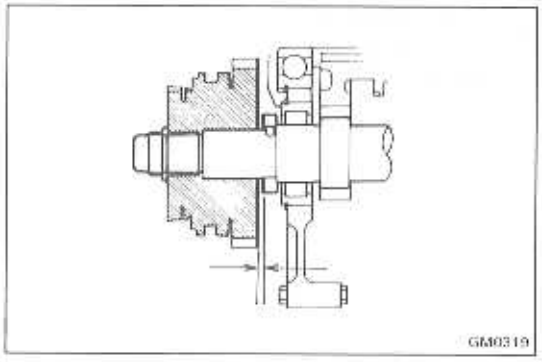

12. (5-Speed)
MEASURE COUNTER FIFTH GEAR THRUST CLEARANCE

Using a feeler gauge, measure the counter 5th gear thrust clearance.

Standard clearance: 0.10 — 0.30 mm (0.0039 — 0.0118 in.)
Maximum clearance: 0.30 mm (0.0118 in.)

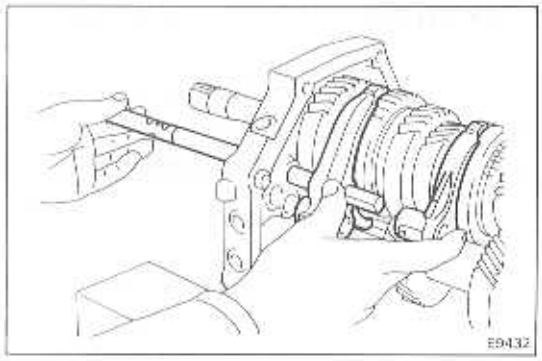

13. INSTALL SHIFT FORK SHAFT NO. 2 AND SHIFT FORK NO. 2

(a) Install shift fork No. 1 and No. 2.

(b) Install shift fork shaft No. 2 through the intermediate plate and shift forks.

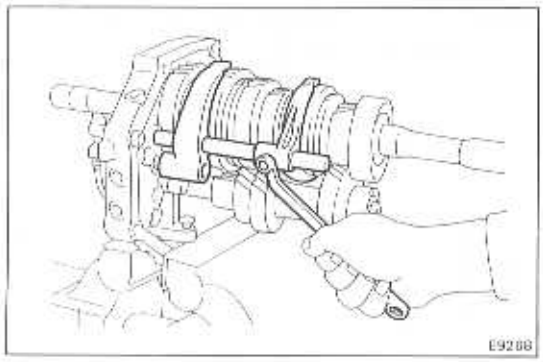

(c) Install shift fork No. 2 set bolt and torque the bolt.

Torque: 200 kg-cm (14 ft-lb, 20 N·m)

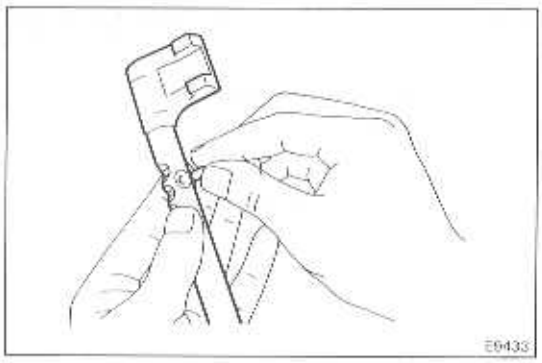

14. INSTALL SHIFT FORK SHAFT NO. 1 AND SHIFT FORK NO. 1

(a) Apply MP grease to interlock pin No. 2 and install them into the shift fork shaft No. 1.

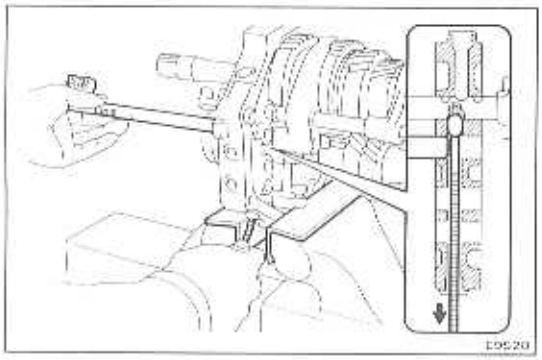

(b) Using a magnetic finger, install interlock pin No. 1 to the intermediate plate.

(c) Install shift fork shaft No. 1 throught the intermediate plate and shift fork No. 1.

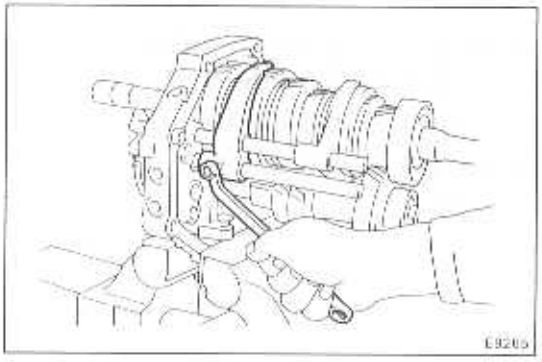

(d) Install shift fork No. 1 set bolt and torque the bolt.

Torque: 200 kg-cm (14 ft-lb, 20 N·m)

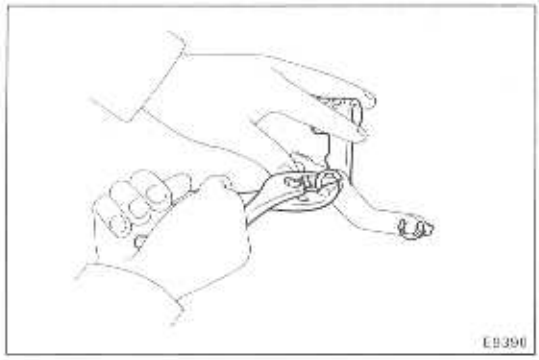

15. INSTALL SHIFT FORK SHAFT NO. 3 AND REVERSE SHIFT FORK

(a) Install shift arm shoe, shift fork and two E-rings to reverse shift arm.

(b) Install reverse shift arm to reverse shift arm bracket.

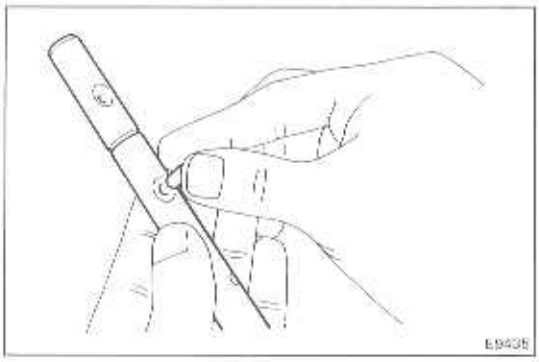

(c) Apply MP grease to interlock pin No. 2 and install them into the shift fork shaft No. 3.

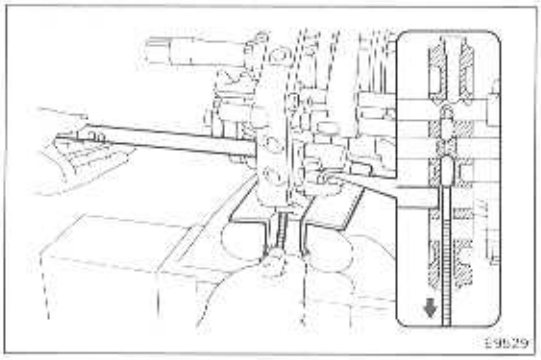

(d) Using a magnetic finger, install interlock pin No. 1 to the intermediate plate.

(e) Install shift fork shaft No. 3 through the intermediate plate and reverse shift fork.

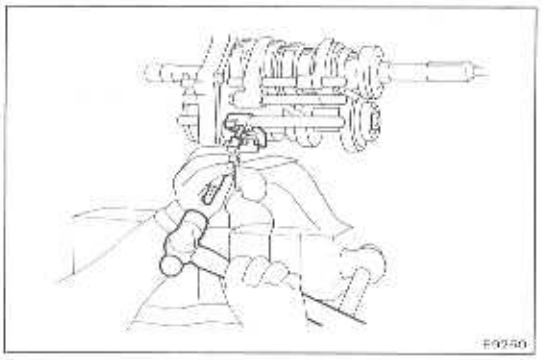

(f) Using a pin punch and hammer, dirve in slotted spring pin.

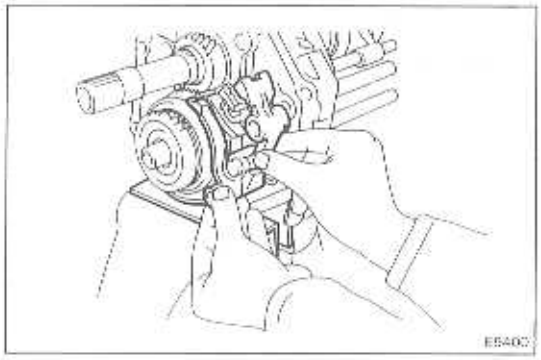

16.-1 (5-Speed) INSTALL REVERSE SHIFT HEAD, FIFTH SHIFT FORK, SHIFT FORK SHAFT NO. 4 AND NO. 5

(a) Install reverse shift head to shift fork shaft No. 3.

(b) Install shift fork No. 3.

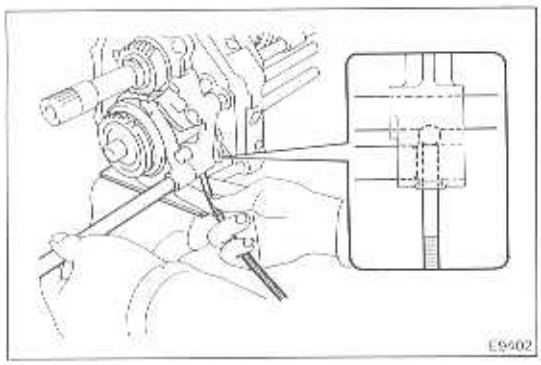

(c) Using a magnetic finger, install ball to the reverse shift head.

(d) Install shift fork shaft No. 4 as shown.

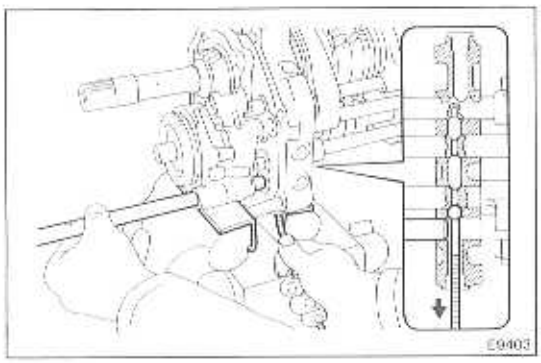

(e) Using a magnetic finger, install interlock ball No. 1 to the intermediate plate.

(f) Install shift fork shaft No. 4 through the intermediate plate.

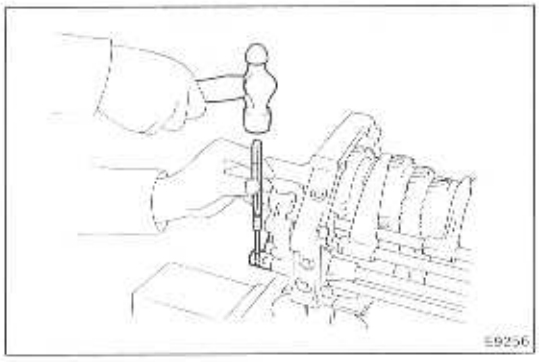

(g) Using a pin punch and hammer, drive in slotted spring pin to the shift fork No. 3.

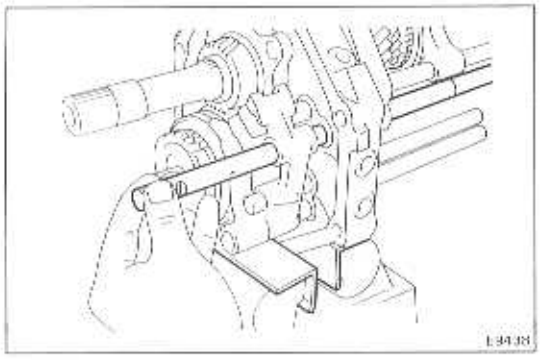

(h) Install shift fork shaft No. 5 through the reverse shift head and intermediate plate.

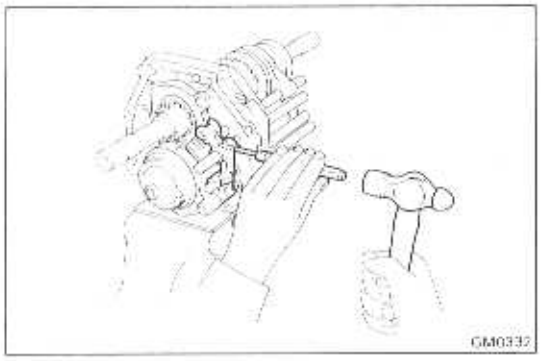

(i) Using a pin punch and hammer, drive in slotted spring pin to the reverse shift head.

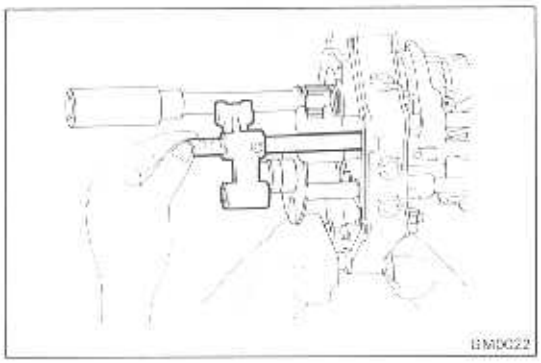

16.-2 (4-Speed)
INSTALL REVERSE SHIFT HEAD AND SHIFT FORK SHAFT NO. 4

(a) Install reverse shift head to shift fork shaft No. 3.

(b) Install shift fork shaft No. 5 through the reverse shift head and intermediate plate.

(c) Using a pin punch and hammer, drive in slotted spring pin to the reverse shift head.

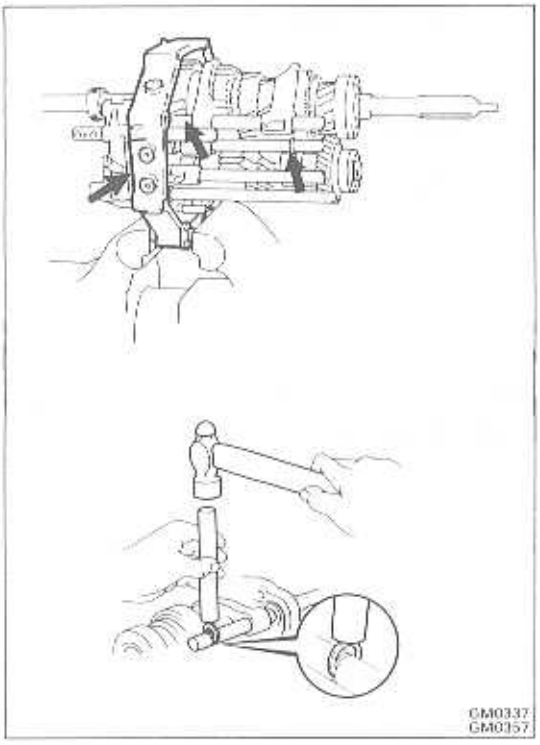

17. INSTALL SHIFT FORK SHAFT SNAP RINGS

Using a brass bar and hammer, drive in snap rings.

5-Speed: Three snap rings
4-Speed: Four snap rings

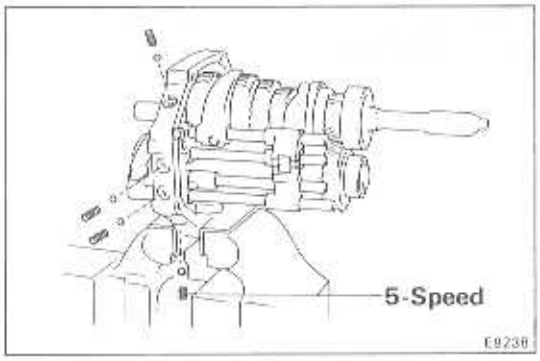

18. INSTALL LOCKING BALLS, SPRINGS AND SCREW PLUGS

(a) Install locking balls and springs.

5-Speed: Four balls and four springs
4-Speed: Three balls and three springs

HINT: Install the short spring into the bottom of the intermediate plate (5-Speed).

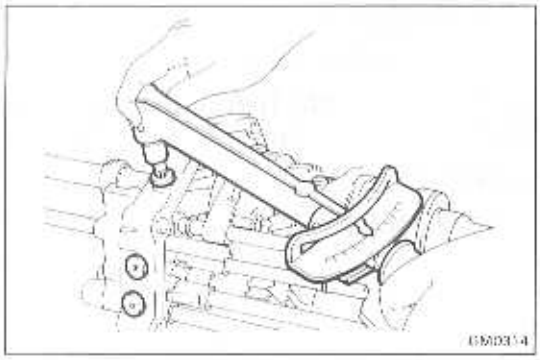

(b) Apply liquid sealer to the plug threads.

Sealant: Part No. 08833-00080, THREE BOND 1344, LOCTITE 242 or equivalent

(c) Install the screw plugs and torque the screw plugs with a torx socket wrench.
(Torx socket wrench T40 09042-00020)

Torque: 190 kg-cm (14 ft-lb, 19 N·m)

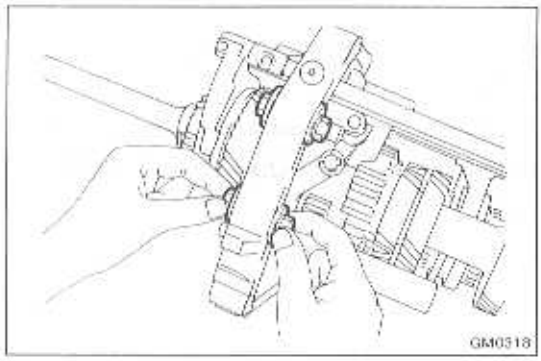

19. DISMOUNT INTERMEDIATE PLATE FROM VISE

(a) Dismount the intermediate plate from the vise.

(b) Remove the bolts, nuts, plate washers.

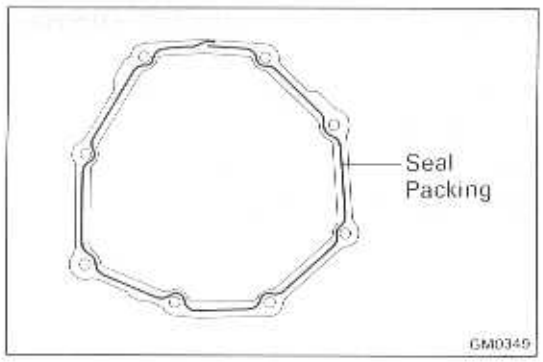

20. INSTALL TRANSMISSION CASE

(a) Apply seal packing to the transmission case as shown.

Seal Packing: Part No. 08833-00090 THREE BOND 1281 or equivalent

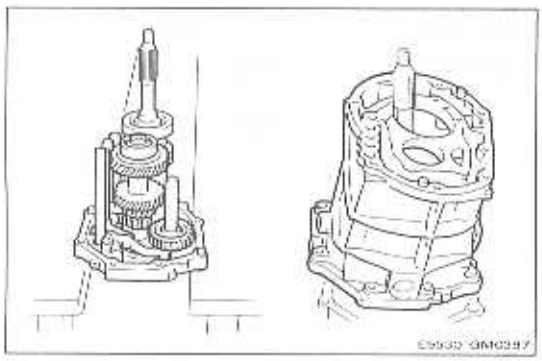

(b) Stand the intermediate plate as shown.

(c) Install transmission case to the intermediate plate as shown.

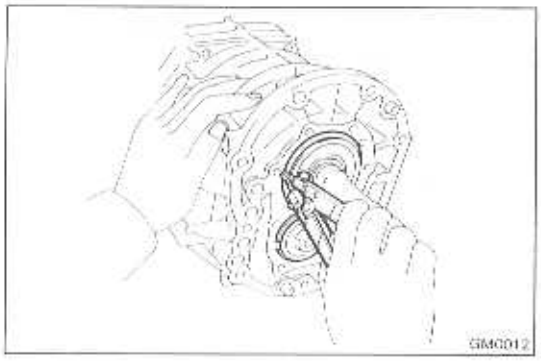

21. INSTALL FRONT BEARING RETAINER

(a) Using a snap ring pliers, install the two snap rings to input shaft bearing and counter gear front bearing.

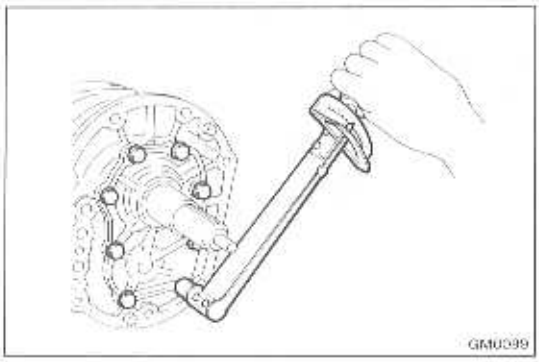

(b) Install the bearing retainer with a new gasket.

(c) Apply liquid sealer to the bolt threads.

Sealant: Part No. 08833-00080, THREE BOND 1344, LOCTITE 242 or equivalent

(d) Install and torque the bolts.

Torque: 170 kg-cm (12 ft-lb, 17 N·m)

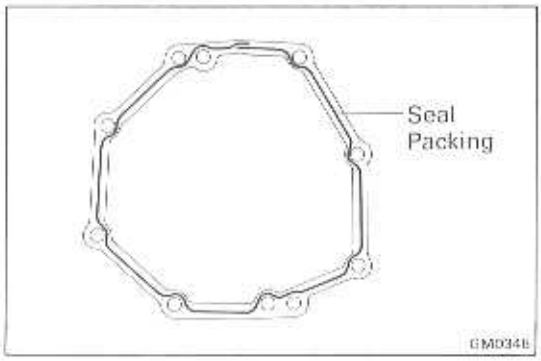

22.-1 (2WD)

INSTALL EXTENSION HOUSING, SHIFT AND SELECT LEVER AND LEVER HOUSING

(a) Apply seal packing to the extension housing as shown.

Seal Packing: Part No. 08833-00090 THREE BOND 1281 or equivalent

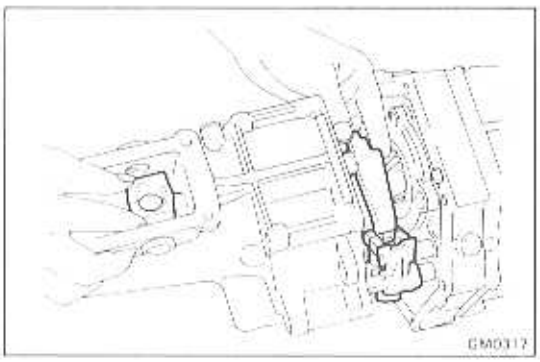

(b) Insert the shift and select lever into the extension housing.

(c) Connect the shift and select lever to the fork shaft and put in the shift lever housing.

(d) Align fork shaft No. 5 to the extension housing installation hole and push in the extension housing.

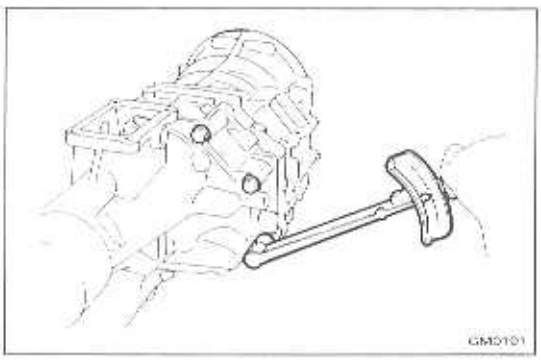

(e) Install and torque the extension housing bolts.

Torque: 380 kg-cm (27 ft-lb, 37 N·m)

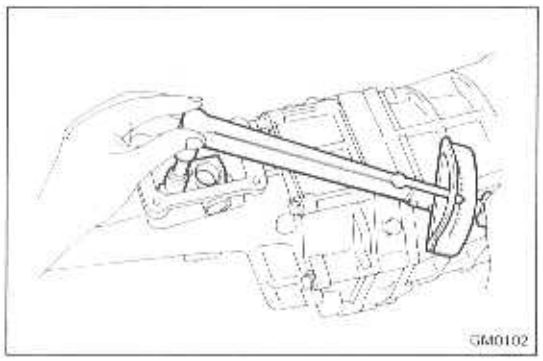

(f) Install and torque the shift lever housing bolt.

Torque: 390 kg-cm (28 ft-lb, 38 N·m)

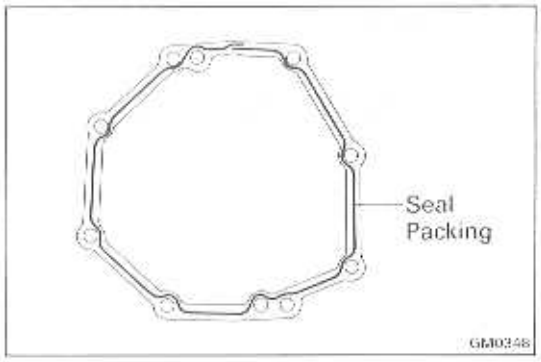

22.-2 (4WD)

INSTALL TRANSFER ADAPTOR, SHIFT LEVER SHAFT AND SHIFT LEVER HOUSING

(a) Apply seal packing to the transfer adaptor as shown.

Seal Packing: Part No. 08833-00090, THREE BOND 1281 or equivalent

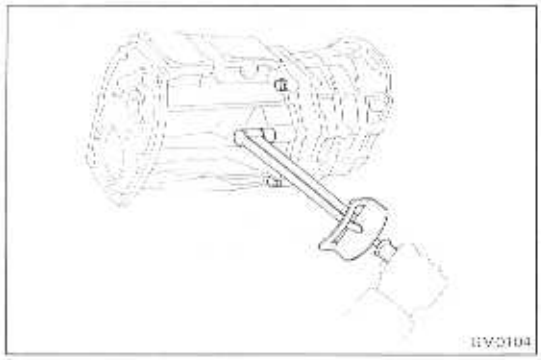

(b) Install and torque the transfer adapter with the eight bolts.

Torque: 380 kg-cm (27 ft-lb, 37 N·m)

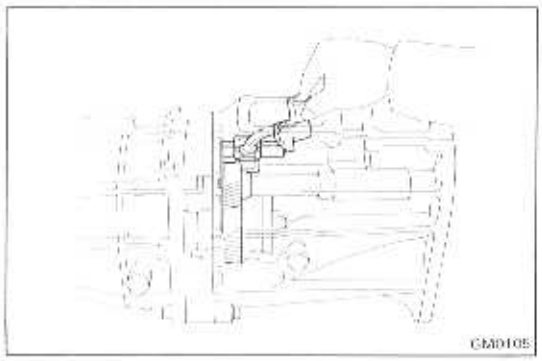

(c) Insert the shift lever housing to the transfer adaptor and connect the fork shafts.

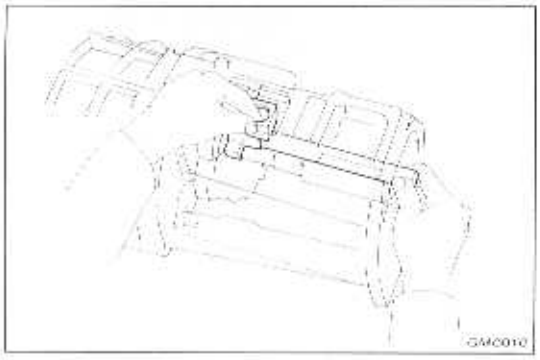

(d) Insert the shift lever shaft to the transfer adaptor and shift lever housing.

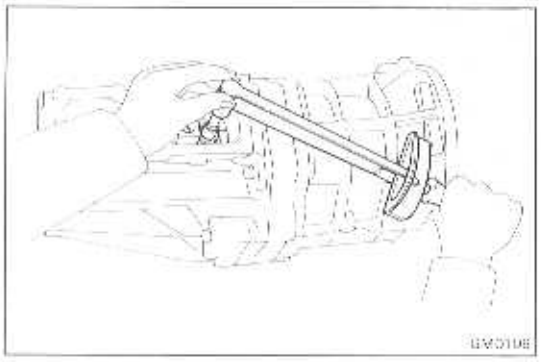

(e) Install and torque the shift lever housing bolt.

Torque: 390 kg-cm (28 ft-lb, 38 N·m)

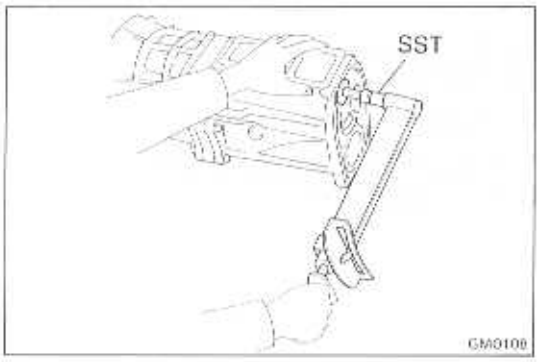

(f) Using SST, install and torque the plug.

SST 09923-00010

Torque: 380 kg-cm (27 ft-lb, 37 N·m)

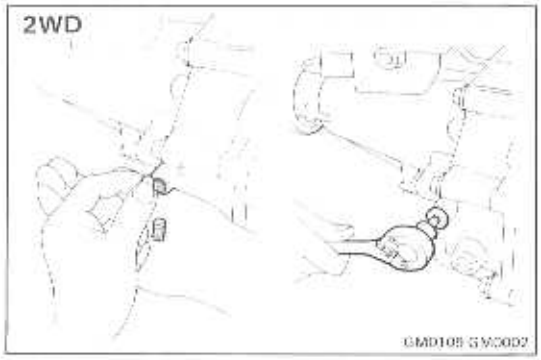

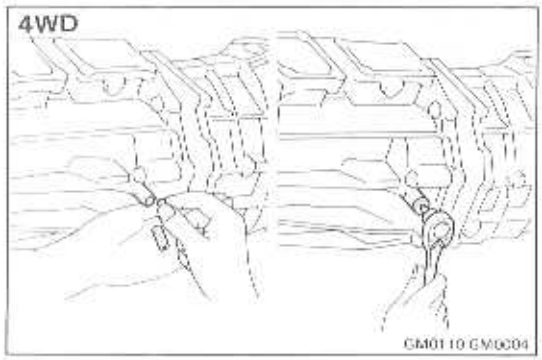

23. INSTALL LOCKING BALL, SPRING AND SCREW PLUG

(a) Apply liquid sealer to the plug threads.

Sealant: Part No. 08833-00080, THREE BOND 1344, LOCTITE 242 or equivalent

(b) Install the locking ball, spring and plug.

(c) Using a torx socket wrench, torque the plug. (Torx socket wrench T40 09042-00020)

Torque: 190 kg-cm (14 ft-lb, 19 N·m)

24. AFTER INSTALLING EXTENSION HOUSING OR TRANSFER ADAPTOR CHECK FOLLOWING ITEMS

(a) Check to see that the input and output shafts rotate smoothly.

(b) Check to see that shifting can be made smoothly to all positions.

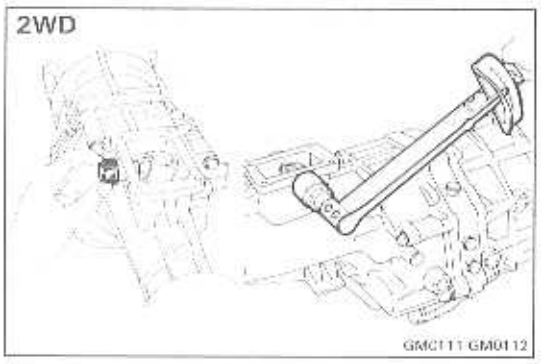

25. INSTALL RESTRICT PINS

(a) Install the black pin on the reverse gear/5th gear side.

(b) Install another pin and torque the pins.

Torque: 280 kg-cm (20 ft-lb, 27 N·m)

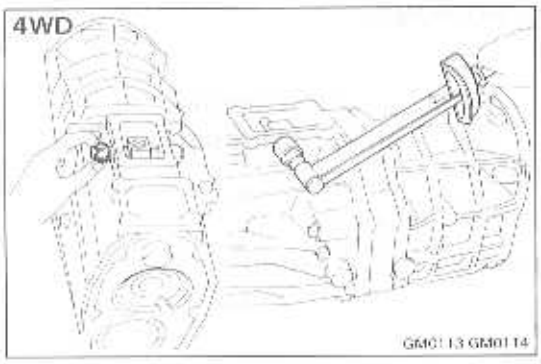

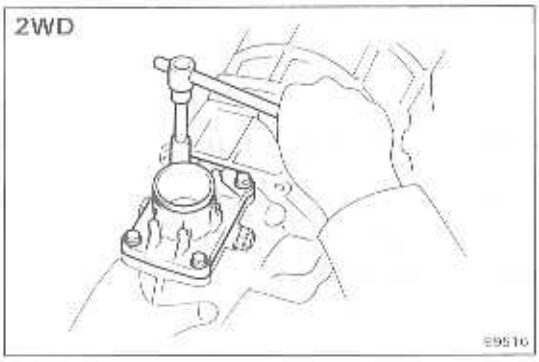

26. INSTALL TRANSMISSION SHIFT LEVER CONTROL RETAINER

(a) Install shift lever control retainer and new gasket.

(b) Install four bolts and torque the bolts.

Torque: 185 kg-cm (13 ft-lb, 18 N·m)

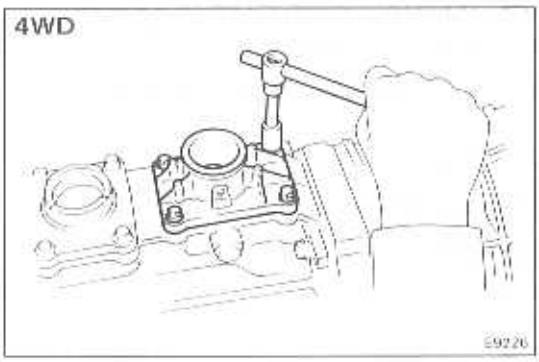

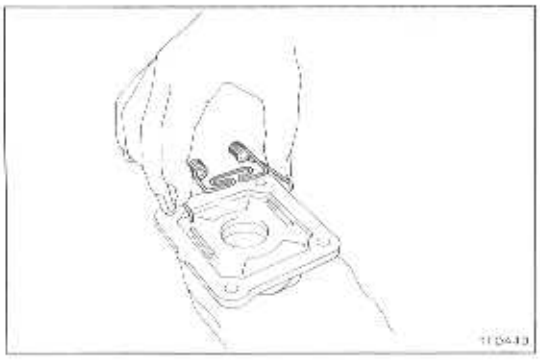

27. (4WD)
INSTALL TRANSFER SHIFT LEVER CONTROL RETAINER

(w/ Planetary Gear Type Transfer)

(a) Install the select return spring from the retainer.

(b) Install shift lever control retainer and new gasket.

(c) Install four bolts and torque the bolts.

Torque: 185 kg-cm (13 ft-lb, 18 N·m)

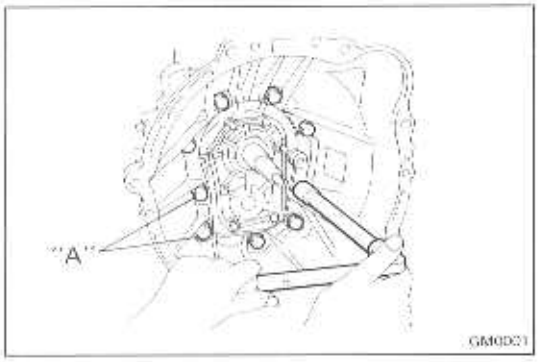

28. INSTALL CLUTCH HOUSING

(a) Install clutch housing.

(b) Apply liquid sealer to the "A" bolt threads.

Sealant: Part No. 08833-00080, THREE BOND 1344, LOCTITE 242 or equivalent

(c) Install nine bolts and torque the bolts.

Torque: 380 kg-cm (27 ft-lb, 37 N·m)

29. INSTALL BACK-UP LIGHT SWITCH

Torque: 380 kg-cm (27 ft-lb, 37 N·m)

30. (2WD)
INSTALL SPEEDOMETER DRIVEN GEAR

(a) Install speedometer driven gear.

(b) Install lock plate, bolt and torque the bolt.

Torque: 115 kg-cm (8 ft-lb, 11 N·m)

31. APPLY MOLYBDENUM DISULPHIDE LITHIUM BASE GREASE (NLGI NO. 2) OR MP GREASE

Apply molybdenum disulphide lithium base grease to the following parts:

- Release fork and hub contact point
- Release fork and push rod contact point
- Release fork pivot point
- Clutch disc spline

32. INSTALL BOOT, FORK, HUB AND BEARING ON TRANSMISSION

SERVICE SPECIFICATIONS

	Page
MANUAL TRANSMISSION	A-2
LUBRICANT	A-4

MANUAL TRANSMISSION

Specifications

Input shaft			
Synchronizer ring to gear clearance	STD	1.0 — 2.0 mm	0.039 — 0.079 in.
	Limit	0.8 mm	0.031 in.
Input shaft snap ring thickness			
	Mark		
	0	2.05 — 2.10 mm	0.0807 — 0.0827 in.
	1	2.10 — 2.15 mm	0.0827 — 0.0846 in.
	2	2.15 — 2.20 mm	0.0846 — 0.0866 in.
	3	2.20 — 2.25 mm	0.0866 — 0.0886 in.
	4	2.25 — 2.30 mm	0.0886 — 0.0906 in.
	5	2.30 — 2.35 mm	0.0906 — 0.0925 in.
Output shaft			
2nd gear journal diameter	Limit	37.984 mm	1.4954 in.
3rd gear journal diameter	Limit	34.984 mm	1.3773 in.
Flange thickness	Limit	4.80 mm	0.1890 in.
Runout	Limit	0.05 mm	0.0020 in.
Inner race flange thickness	Limit	3.99 mm	0.1571 in.
Inner race outer diameter	Limit	38.985 mm	1.5348 in.
Gear thrust clearance			
1st, 2nd & 3rd	STD	0.10 — 0.25 mm	0.0039 — 0.0098 in.
	Limit	0.25 mm	0.0098 in.
Gear oil clearance			
1st	STD	0.009 — 0.032 mm	0.0004 — 0.0013 in.
	Limit	0.032 mm	0.0013 in.
2nd & 3rd	STD	0.009 — 0.033 mm	0.0004 — 0.0013 in.
	Limit	0.033 mm	0.0013 in.
Shift fork to hub sleeve clearance	Limit	1.0 mm	0.039 in.
Synchronizer ring to gear clearance	STD	1.0 — 2.0 mm	0.039 — 0.079 in.
	Limit	0.8 mm	0.031 in.
Output shaft snap ring thickness			
Front	Mark		
	C-1	1.75 — 1.80 mm	0.0689 — 0.0709 in.
	D	1.80 — 1.85 mm	0.0709 — 0.0728 in.
	D-1	1.85 — 1.90 mm	0.0728 — 0.0748 in.
	E	1.90 — 1.95 mm	0.0748 — 0.0768 in.
	E-1	1.95 — 2.00 mm	0.0768 — 0.0787 in.
	F	2.00 — 2.05 mm	0.0787 — 0.0807 in.
	F-1	2.05 — 2.10 mm	0.0807 — 0.0827 in.

Specifications (Cont'd)

Output shaft snap ring thickness			
Rear	Mark		
	A	2.67 — 2.72 mm	0.1051 — 0.1071 in.
	B	2.73 — 2.78 mm	0.1075 — 0.1094 in.
	C	2.79 — 2.84 mm	0.1098 — 0.1118 in.
	D	2.85 — 2.90 mm	0.1122 — 0.1142 in.
	E	2.91 — 2.96 mm	0.1146 — 0.1165 in.
	F	2.97 — 3.02 mm	0.1169 — 0.1189 in.
	G	3.03 — 3.08 mm	0.1193 — 0.1213 in.
	H	3.09 — 3.14 mm	0.1217 — 0.1236 in.
	J	3.15 — 3.20 mm	0.1240 — 0.1260 in.
	K	3.21 — 3.26 mm	0.1264 — 0.1283 in.
	L	3.27 — 3.32 mm	0.1287 — 0.1307 in.
Counter gear and reverse idler gear			
Counter gear outer diameter of	STD	25.98 — 26.00 mm	1.0228 — 1.0236 in.
needle roller bearing race	Limit	25.86 mm	1.0181 in.
Gear thrust clearance	STD	0.10 — 0.30 mm	0.0039 — 0.0118 in.
Counter 5th	Limit	0.30 mm	0.0118 in.
Gear oil clearance			
Counter 5th	STD	0.009 — 0.032 mm	0.0004 — 0.0013 in.
	Limit	0.032 mm	0.0013 in.
Revers Idler	STD	0.004 — 0.08 mm	0.0016 — 0.0031 in.
	Limit	0.13 mm	0.0051 in.
Shift fork to hub sleeve clearance	Limit	1.0 mm	0.039 in.
Synchronizer ring to gear clearance	STD	1.0 — 2.0 mm	0.039 — 0.079 in.
	Limit	0.8 mm	0.031 in.
Reverse idler gear to shift arm shoe	STD	0.05 — 0.27 mm	0.0020 — 0.106 in.
clearance	Limit	0.5 mm	0.197 in.
Counter gear snap ring thickness			
Front bearing	Mark		
	1	2.05 — 2.10 mm	0.0807 — 0.0827 in.
	2	2.10 — 2.15 mm	0.0827 — 0.0846 in.
	3	2.15 — 2.20 mm	0.0846 — 0.0866 in.
	4	2.20 — 2.25 mm	0.0866 — 0.0886 in.
	5	2.25 — 2.30 mm	0.0886 — 0.0906 in.
	6	2.30 — 2.35 mm	0.0906 — 0.0925 in.
Counter gear snap ring thickness			
Gear splie piece No. 5 or	Mark		
oil separator	A	2.80 — 2.85 mm	0.110 — 0.112 in.
	B	2.85 — 2.90 mm	0.112 — 0.114 in.
	C	2.90 — 2.95 mm	0.114 — 0.116 in.
	D	2.95 — 3.00 mm	0.116 — 0.118 in.
	E	3.00 — 3.05 mm	0.118 — 0.120 in.
	F	3.05 — 3.10 mm	0.120 — 0.122 in.
	G	3.10 — 3.15 mm	0.122 — 0.124 in.

Specifications (Cont'd)

Oil Seals		
Front bearing retainer oil seal		
Drive in depth	12.2 — 13.2 mm	0.480 — 0.520 in.
Speedometer driven gear oil seal		
Oil seal depth	20 mm	0.79 in.

Torque Specifications

Part tightened	kg-cm	ft-lb	N·m
Straight screw plug	190	14	19
Extension housing x Transmission case (2WD)	380	27	37
Transfer adaptor x Transmission case (4WD)	380	27	37
Front bearing retainer x Transmission case	170	12	17
Rear bearing retainer x Intermediate plate	185	13	18
Reverse shift arm bracket	185	13	18
Shift fork x Shift fork shaft	200	14	20
Back-up light switch	380	27	37
Reverse idler gear shaft stopper bolt	175	13	17
Clutch housing x Transmission case	380	27	37
Shift lever shaft housing x Transmission case	170	12	17
Shift outer lever lock pin nut	120	9	12
Select outer lever lock pin nut	80	69 in.-lb	7.8
Restrict pin	280	20	27
Shift lever retainer x Extension housing	185	13	18
Oil receiver x Extension housing (2WD)	115	8	11
Oil receiver pipe x Transfer adaptor (4WD)	185	13	18
Oil receiver × Transfer adaptor (4WD)	130	9	13
Speedometer driven gear lock plate (2WD)	115	8	11

LUBRICANT

Item		Capacity			Classification
		Liters	US qts	Imp. qts	
Manual transmission oil					
2WD	4-Speed	2.4	2.5	2.1	API GL-4 or GL-5
	5-Speed	2.2	2.3	1.9	SAE 75W-90
4WD					
(Remoto Control Shift Type)					
	5-Speed	2.6	2.7	2.3	
(Direct Shift Type)					
Hilux	5-Speed	3.9	4.1	3.4	
Land Cruiser	4-Speed	2.8	3.0	2.5	
	5-Speed	2.6	2.7	2.3	

STANDARD BOLT TORQUE SPECIFICATIONS

Page

STANDARD BOLT TORQUE SPECIFICATIONS . . . B-2

STANDARD BOLT TORQUE SPECIFICATIONS

HOW TO DETERMINE BOLT STRENGTH

	Mark	Class		Mark	Class
Hexagon head bolt	Bolt head No. 4– 5– 6– 7–	4T 5T 6T 7T	Stud bolt	No mark	4T
	No mark	4T			
Hexagon flange bolt w/ washer hexagon bolt	No mark	4T		Grooved	6T
Hexagon head bolt	Two protruding lines	5T			
Hexagon flange bolt w/ washer hexagon bolt	Two protruding lines	6T	Welded bolt	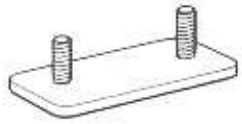	4T
Hexagon head bolt	Three protruding lines	7T			

SPECIFIED TORQUE FOR STANDARD BOLTS

Class	Diameter mm	Pitch mm	Specified torque					
			Hexagon head bolt			Hexagon flange bolt		
			kg-cm	ft-lb	N-m	kg-cm	ft-lb	N-m
4T	6	1	55	48 in.-lb	5.4	60	52 in.-lb	5.9
	8	1.25	130	9	13	145	10	14
	10	1.25	260	19	25	290	21	28
	12	1.25	480	35	47	540	39	53
	14	1.5	760	55	75	850	61	83
	16	1.5	1,150	83	113		–	
5T	6	1	65	56 in.-lb	6.4		–	
	8	1.25	160	12	16		–	
	10	1.25	330	24	32		–	
	12	1.25	600	43	59		–	
	14	1.5	930	67	91		–	
	16	1.5	1,400	101	137		–	
6T	6	1	80	69 in.-lb	7.8	90	78 in.-lb	8.8
	8	1.25	195	14	19	215	16	21
	10	1.25	400	29	39	440	32	43
	12	1.25	730	53	72	810	59	79
	14	1.5		–		1,250	90	123
7T	6	1	110	8	11	120	9	12
	8	1.25	260	19	25	290	21	28
	10	1.25	530	38	52	590	43	58
	12	1.25	970	70	95	1,050	76	103
	14	1.5	1,500	108	147	1,700	123	167
	16	1.5	2,300	166	226		–	

SST AND SSM

	Page
SST (SPECIAL SERVICE TOOLS)	C-2
SSM (SPECIAL SERVICE MATERIALS)	C-3

SST (SPECIAL SERVICE TOOLS)

HINT: Classification

A = SST required for vehicle inspections and minor repairs and multipurpose SST.

B = SST required for major repairs involving disassembly of components.

C = SST required for rather special, less frequent work not of classibiable as either A or B.

Illustration	Part No.	Classification	Part Name
	09201-60011	A	Valve Stem Guide Remover & Replacer
	09213-60017	A	Crankshaft Pulley & Gear Puller Set
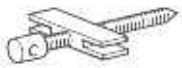	(09213-00020)		(Body with Bolt)
	(09213-00030)		(Handle)
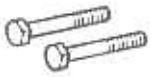	(09213-00060)		(Bolt Set)
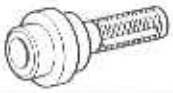	09223-50010	B	Crankshaft Front Oil Seal Replacer
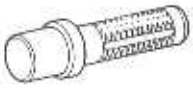	09307-30010	B	Transmission Extension Housing Metal Replacer
	09308-00010	A	Oil Seal Puller
	09308-10010	A	Oil Seal Puller
	09316-60010	B	Transmission & Transfer Bearing Replacer
	(09316-00010)		(Replacer Pipe)
	09325-12010	A	Transmission Oil Plug

SST (SPECIAL SERVICE TOOLS) (Cont'd)

Illustration	Part No.	Classification	Part Name
	09325-20010	A	Transmission Oil Plug
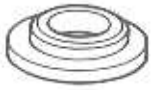	09506-35010	B	Differential Drive Pinion Rear Bearing Replacer
	09602-35011	B	Front Axle Inner Bearing Puller
	09921-00010	A	Spring Tension Tool
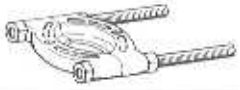	09950-00020	B	Bearing Remover
	09950-20017	A	Universal Puller

SSM (SPECIAL SERVICE MATERIALS)

Part Name	Part No.	Use etc.
Seal packing 1281, Three bond 1281 or equivalent	08826-00090	Intermediate plate × Transmission case Intermediate plate × Extension housing (2WD) Intermediate plate × Transfer adaptor (2WD)
Adhesive 1344, Three bond 1344, Loctite 242 or equivalent	08833-00080	Straight screw plug for reverse restrict pin Straight screw plug for shift fork shaft locking ball Front bearing retainer set bolt Clutch housing set bolt Shift lever shaft assembly set bolt (Remote control shift type) Transfer adaptor × Intermediate plate set bolt (4WD/Remote control shift type)